RE-HOMOLOGATED 11-10-2021

Homologation N °

100H / RH

KARTING ENGINE

Manufacturer	**ST GEORGE KART CENTRE WHOLESALE PTY LTD**
Make	**PRD**
Model	**GALAXY**
Validity of the homologation	*Expiry Date : 31 December 2028*
Number of pages	**45**

This Homologation Form reproduces descriptions, illustrations and dimensions of the engine at the time that Karting Australia conducted the homologation.

PHOTO OF DRIVE SIDE OF ENGINE

PHOTO OF OPPOSITE SIDE OF ENGINE

Signature and stamp of Karting Australia

Original Homologation 17/12/2014
Les Allen
National Technical Commissioner

Re-Homologation 11/10/2021
Ashley Woolner
National Technical Commissioner

Updated 01/01/2024

PHOTO OF DRIVE SIDE OF THE COMPLETE ENGINE

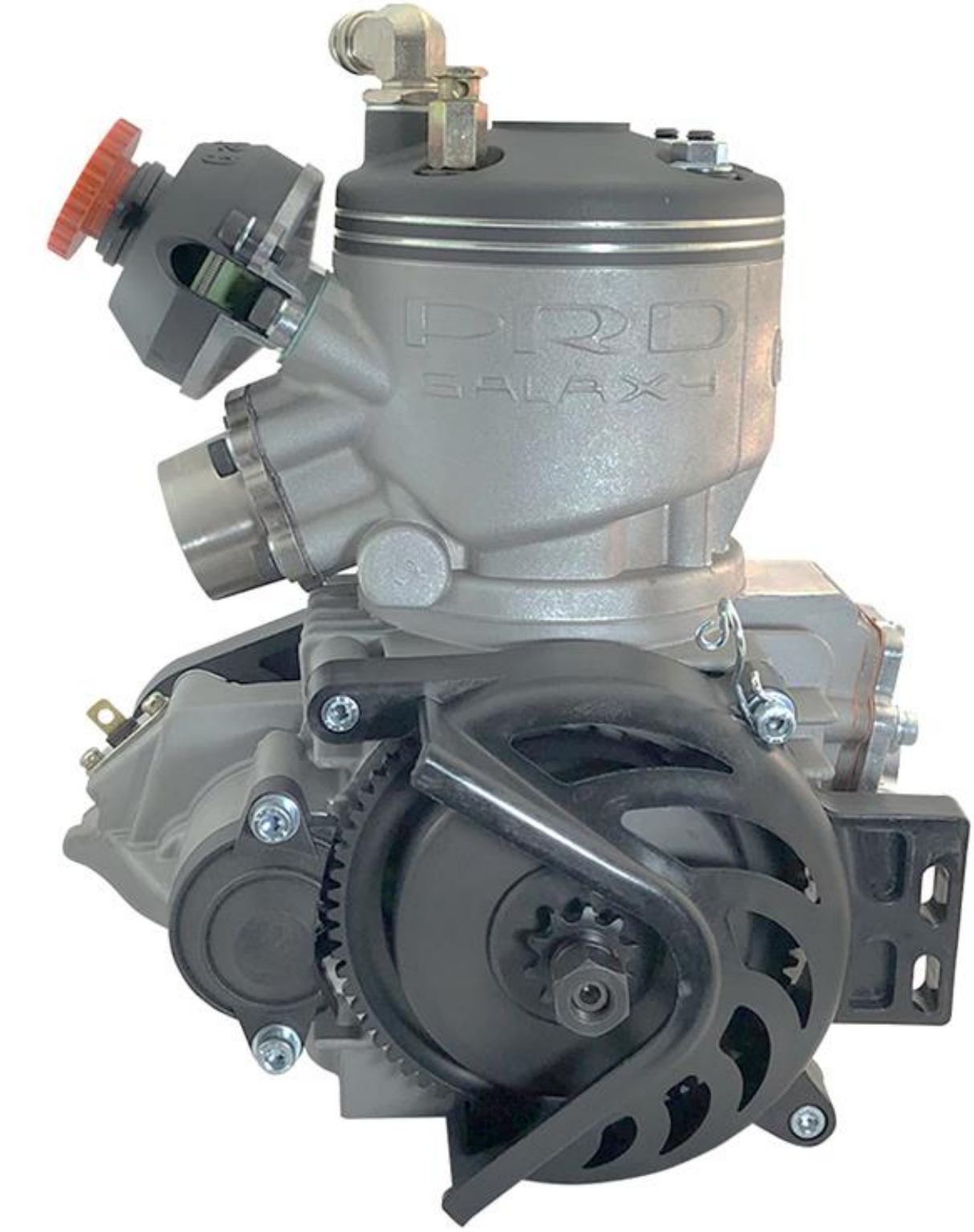

PHOTO OF OPPOSITE DRIVE SIDE OF THE COMPLETE ENGINE

PHOTO OF THE REAR OF THE COMPLETE ENGINE

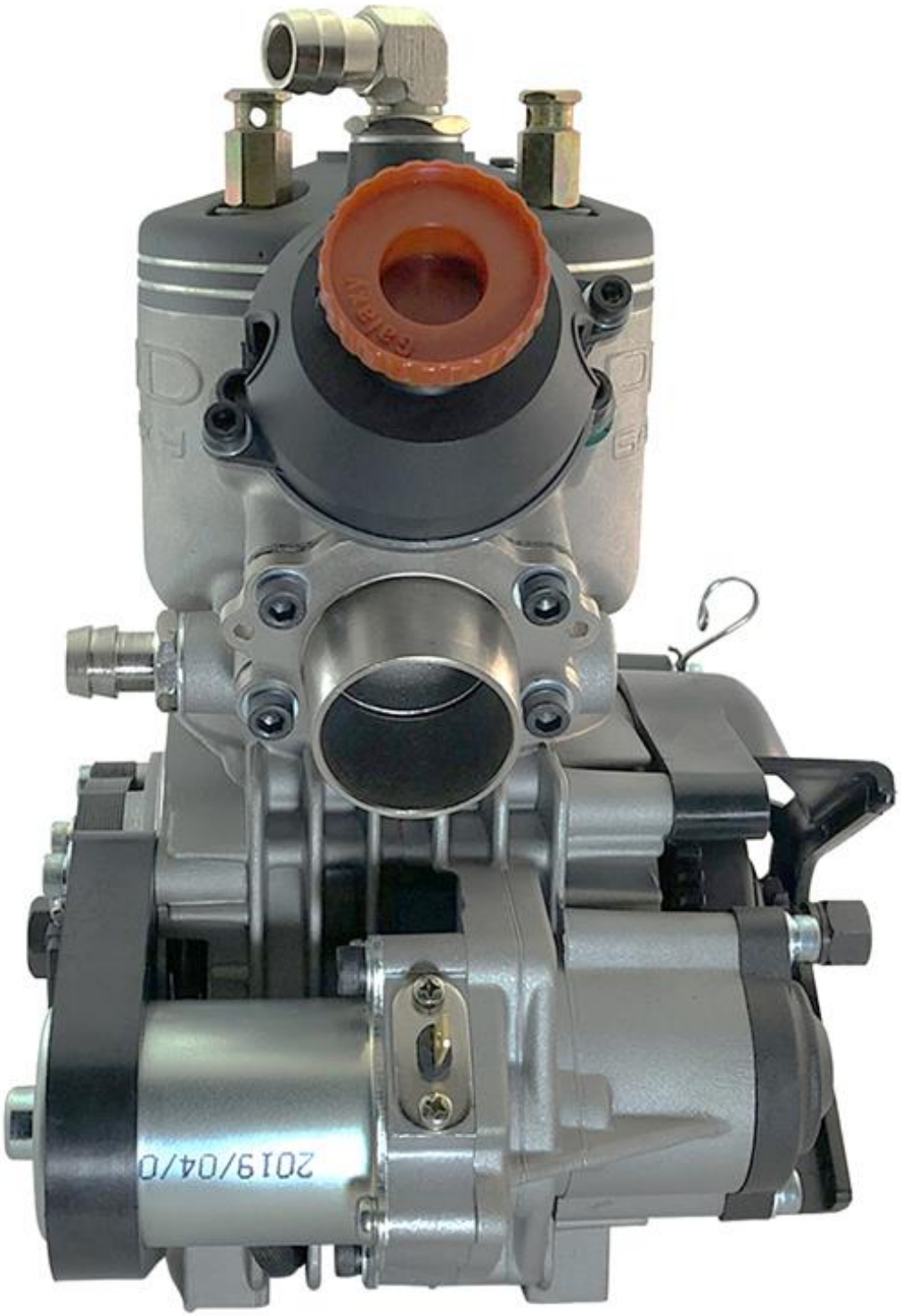

PHOTO OF THE FRONT OF THE COMPLETE ENGINE

PHOTO OF THE COMPLETE ENGINE TAKEN FROM ABOVE

PHOTO OF THE COMPLETE ENGINE TAKEN FROM BELOW

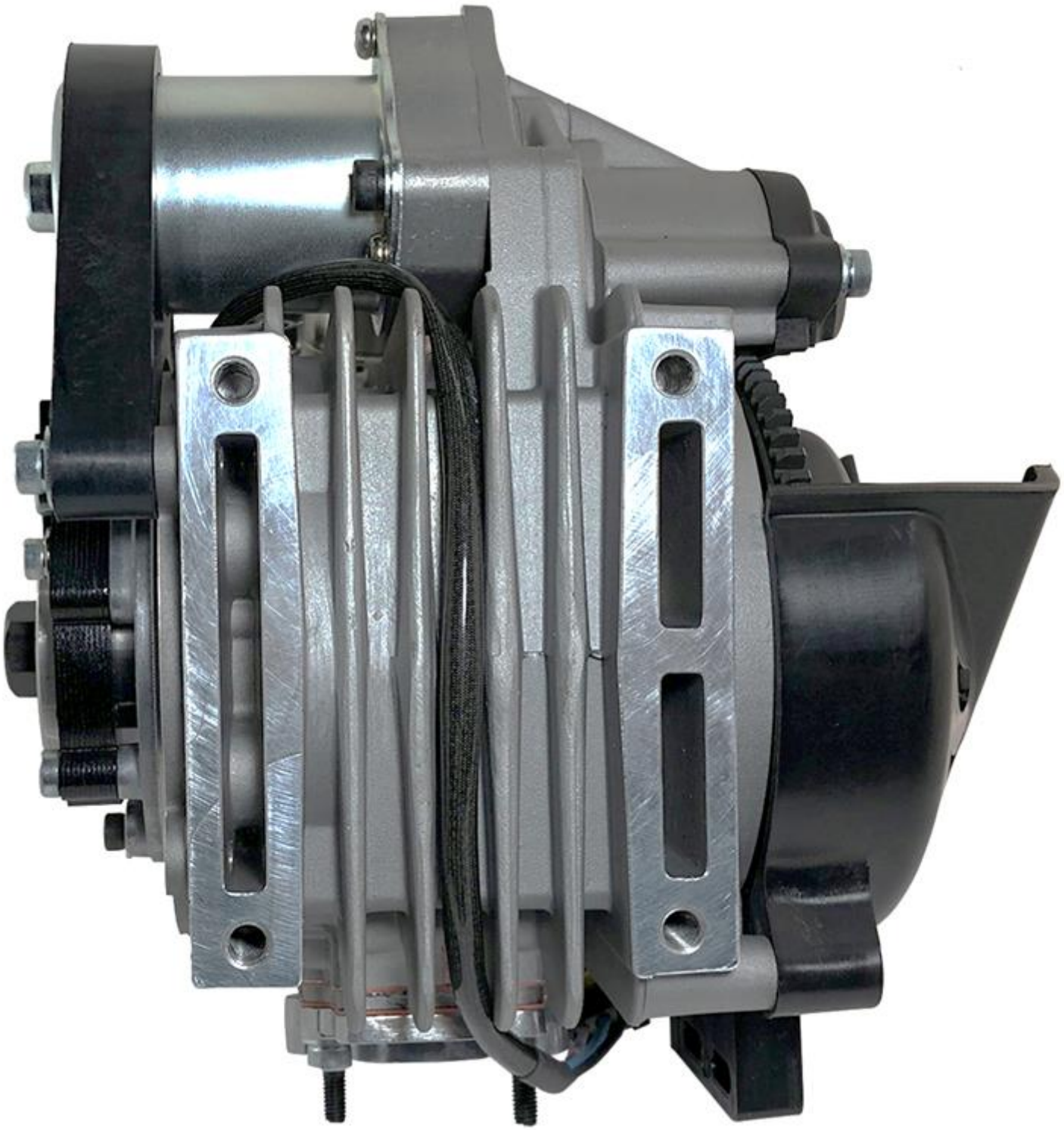

TECHNICAL INFORMATION

A	CHARACTERISTICS	
The number of decimal places must be 2 or comply with the relevant tolerance.		***Tolerances & Remarks***
Cylinder		
Volume of cylinder	**123.15cm³**	<125cm³
Original bore	**53.90mm**	--
Theoritical maximum bore	**54.40mm**	--
Original Stroke	**54mm**	--
Number of transfer ducts, cylinder/sump	**3 / 3**	--
Number of exhaust ports / ducts	**3**	--
Volume of the combustion chamber	**10.5cm³**	Minimum
Squish Measurement	0.8mm	Minimum
Crankshaft		
Number of bearings	**2**	--
Diameter of bearings	**25**	±0.1mm
Minimum weight of crankshaft assembly Pre July 2018	**1880g**	Minimum
Minimum weight of crankshaft assembly Post July 2018	**2020g**	Minimum
Exhaust Restrictor		
Restrictor for TaG Restricted class's	**PRD G1 24.95mm**	Max
Connecting Rod Pre July 2018		
Connecting rod centreline Pre July 2018	**100mm**	±0.2mm
Diameter of big end Pre July 2018	**18mm**	±0.05mm
Diameter of small end Pre July 2018	**14mm**	±0.05mm
Min. weight of the connecting rod Pre July 2018	**118g**	Minimum
Connecting Rod Post July 2018		
Connecting rod centreline Post July 2018	**102mm**	±0.2mm
Diameter of big end Post July 2018	**20mm**	±0.05mm
Diameter of small end Post July 2018	**14mm**	±0.05mm
Min. weight of the connecting rod Post July 2018	**113g**	Minimum

Piston		
Number of piston rings	**1**	
Min. weight of the bare piston	**130g**	Minimum
Gudgeon Pin		
Diameter	**14mm**	±0.05mm
Length	**44mm**	±0.15mm
Minimum weight	**24g**	Minimum
Clutch		
Minimum weight	**1050g**	Minimum
Of all the parts represented on the page 21 technical drawing		

B	***OPENING ANGLES***	
Of the inlet (main transfer ports)	**126°**	**±2°**
Of the exhaust	**193°**	**±2°**
Of the exhaust ears	**184°**	**±2°**
Of the boosters	**126°**	**±2°**

C	***MATERIAL***
Cylinder head	**ALLOY**
Cylinder	**ALLOY**
Cylinder wall	**CAST IRON**
Sump	**ALLOY**
Crankshaft	**IRON**
Connecting rod	**STEEL**
Piston	**ALLOY**

D	PHOTOS, DRAWINGS & GRAPHS

D.1 *CYLINDER UNIT*

EXPLODED DRAWING OF THE CYLINDER, CYLINDER HEAD AND EXHAUST MANIFOLD UNIT

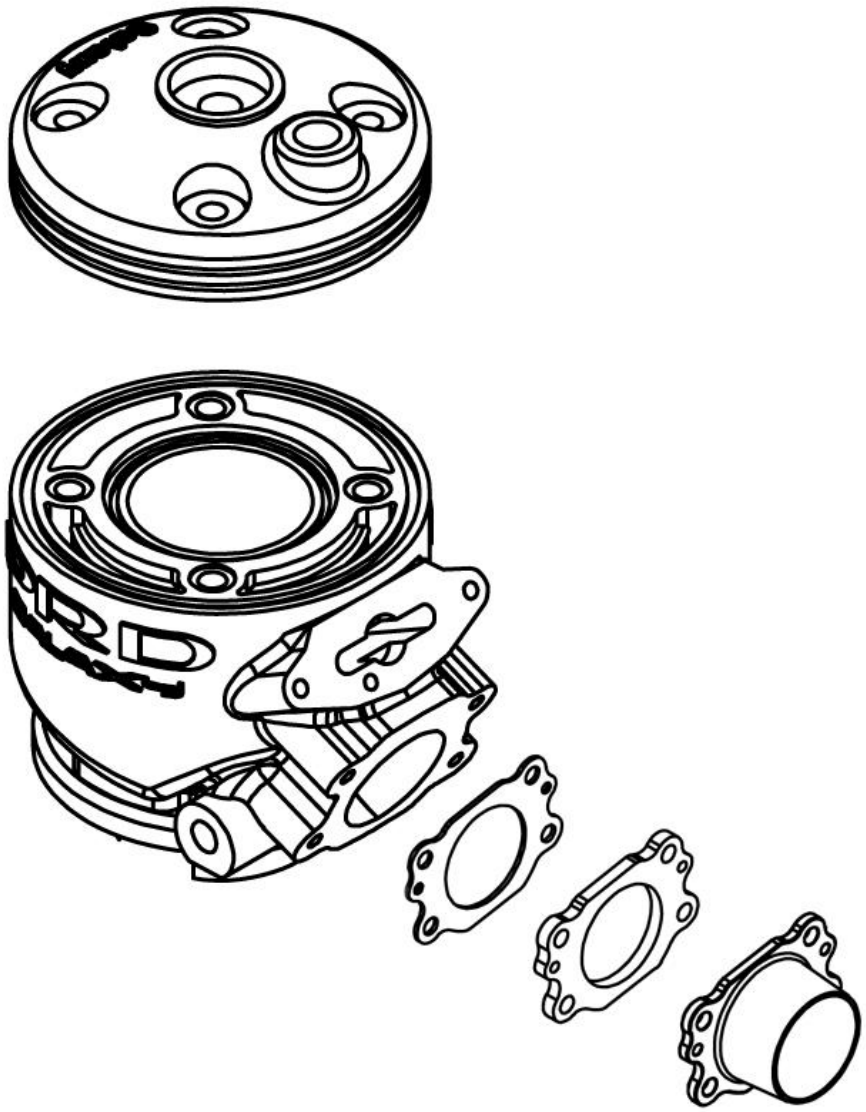

DRAWING OF THE CYLINDER DEVELOPMENT

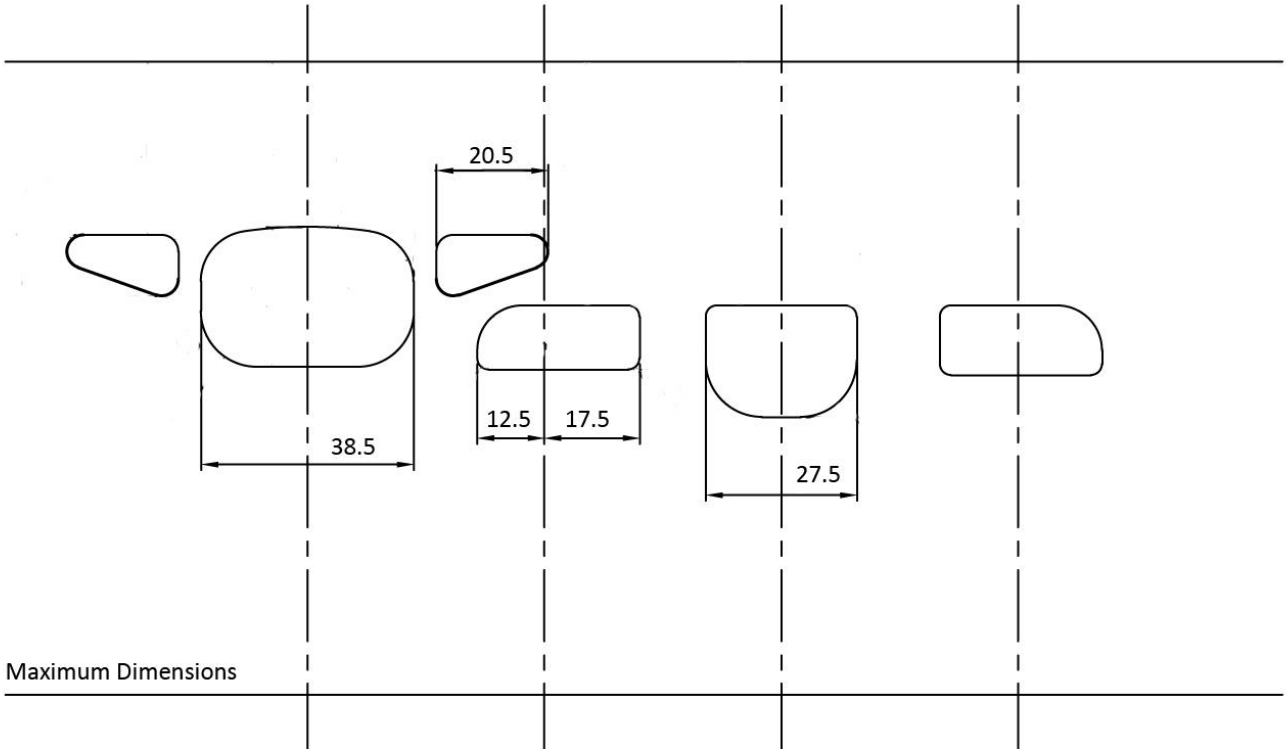

DRAWING OF THE CYLINDER BASE (Without dimensions)

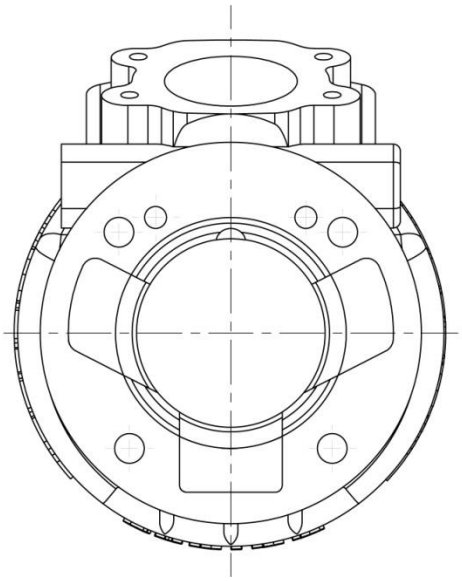

PHOTO OF THE CYLINDER BASE

... Section D.1

DRAWING OF THE CYLINDER HEAD AND OF THE COMBUSTION CHAMBER (Without dimensions)

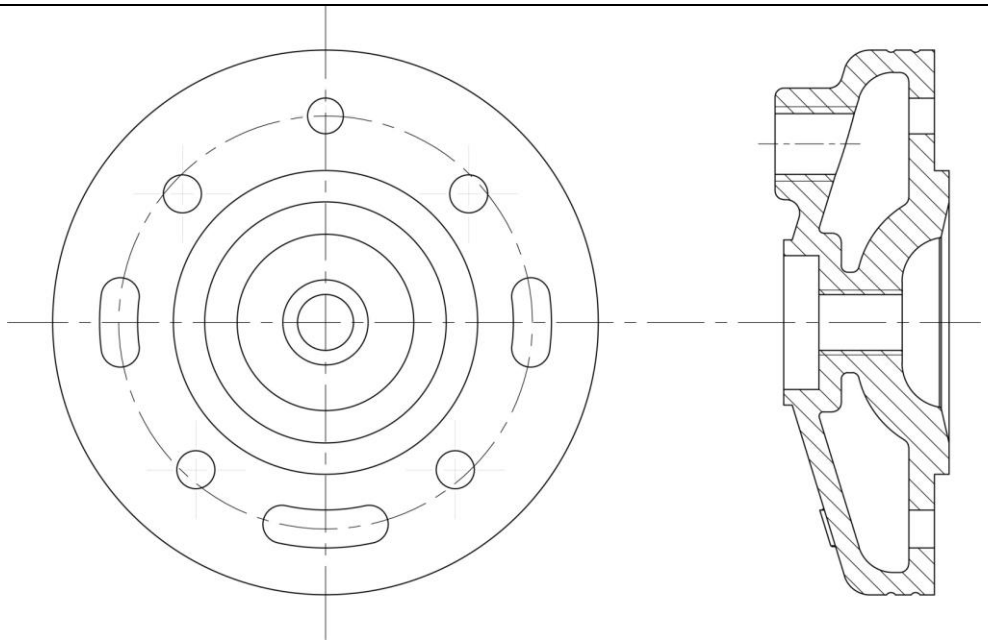

PRE MARCH 2019

PHOTO OF THE CYLINDER HEAD	PHOTO OF THE COMBUSTION CHAMBER IN THE CYLINDER HEAD
 PRE MARCH 2019	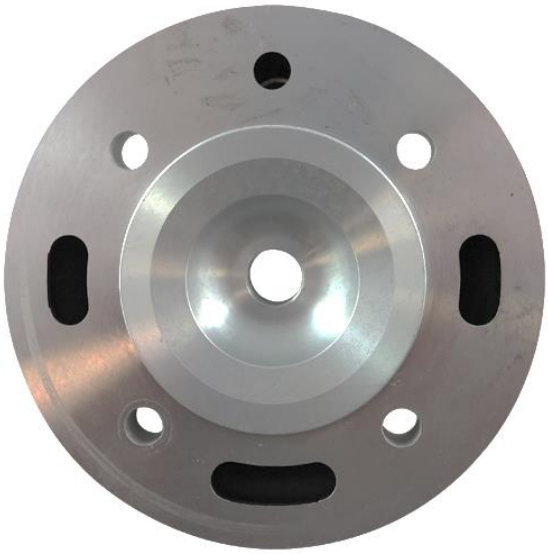 PRE MARCH 2019

DRAWING OF THE CYLINDER HEAD AND OF THE COMBUSTION CHAMBER
(Without dimensions)

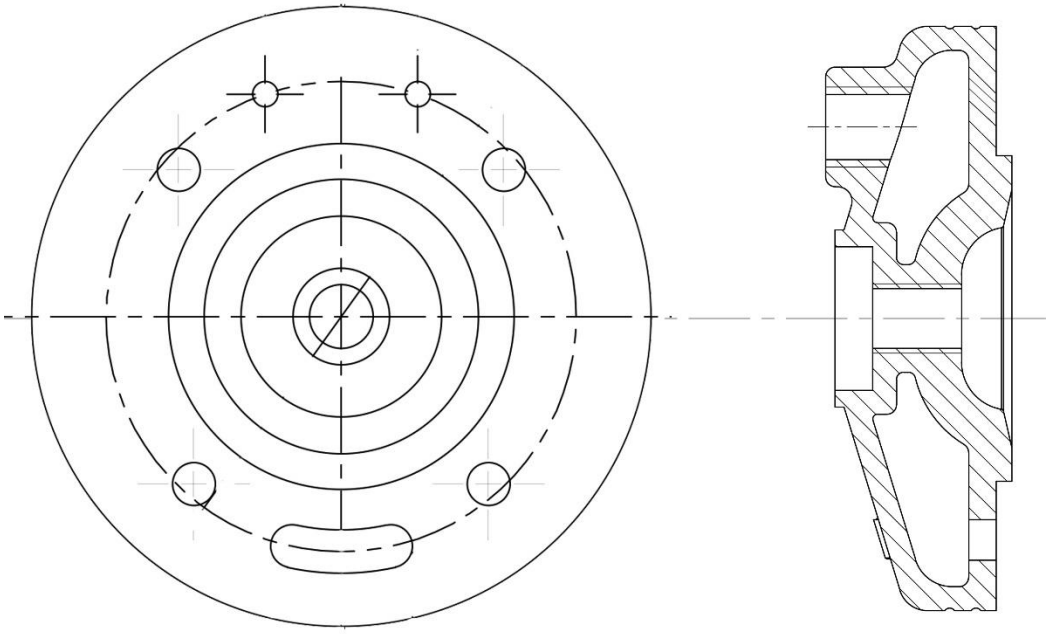

POST MARCH 2019

PHOTO OF THE CYLINDER HEAD	PHOTO OF THE COMBUSTION CHAMBER IN THE CYLINDER HEAD
 **POST MARCH 2019**	 **POST MARCH 2019**

... Section D.1

VERTICAL CROSS SECTION VIEW OF CYLINDER WITH LINER (Without dimensions)

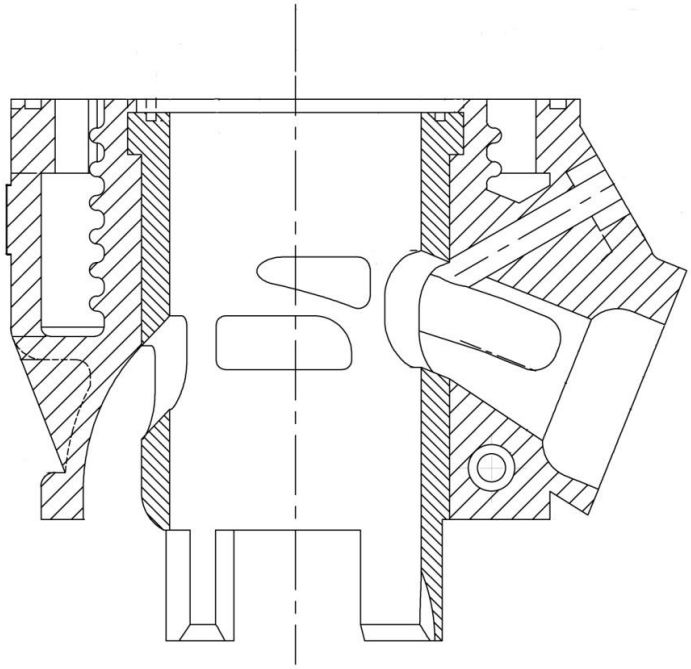

PHOTO OF THE CYLINDER FROM ABOVE	PHOTO OF THE CYLINDER FROM RH SIDE
 PRE 2019  POST 2019	

... Section D.1

TRANSFER DUCTS VOLUME			
	Transfer position on 3-transfer cylinder	***TRANSFER No.***	***VOLUME in cm³***
	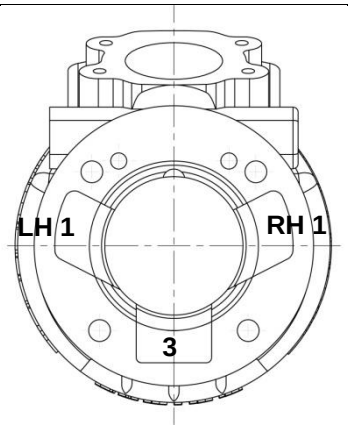	*Transfer No. 1 LH*	18.50 *+/- 5 %*
		Transfer No. 2 LH	18.50 *+/- 5 %*
		Transfer No. 3 or 5	12.80 *+/- 8 %*

EXHAUST DUCT LENGTH		
	ANGLE α *in* **°**	**Minimum** *in* **mm**
	68° +/-1°	49.64 mm +/-1.00
The L min. dimension will be the result of the value taken on the reference engine minus 5 mm.		
Technical Drawing No.13		
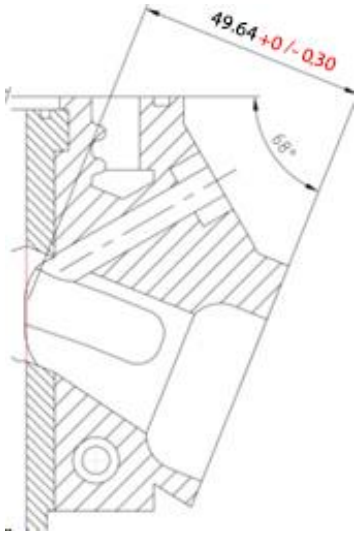		

- ***A:*** *Centring guide centred in relation to the exhaust duct by the exhaust manifold fixation screws, with a total thickness of 20 +/- 0.05 mm and being drilled in its centre by a hole with a 5 mm diameter, H7 bore.*
- ***B:*** *Control gauge composed of a shaft with a 5g6 diameter having a 2.5 mm radius at its end and a length = L min + 20+10.*

D.2 CONROD, CRANKCASE, CRANKSHAFT & PISTON

EXPLODED DRAWING OF THE PISTON, CRANKSHAFT, CONNECTING ROD AND CRANKCASES UNIT (Exploded Crankshaft)

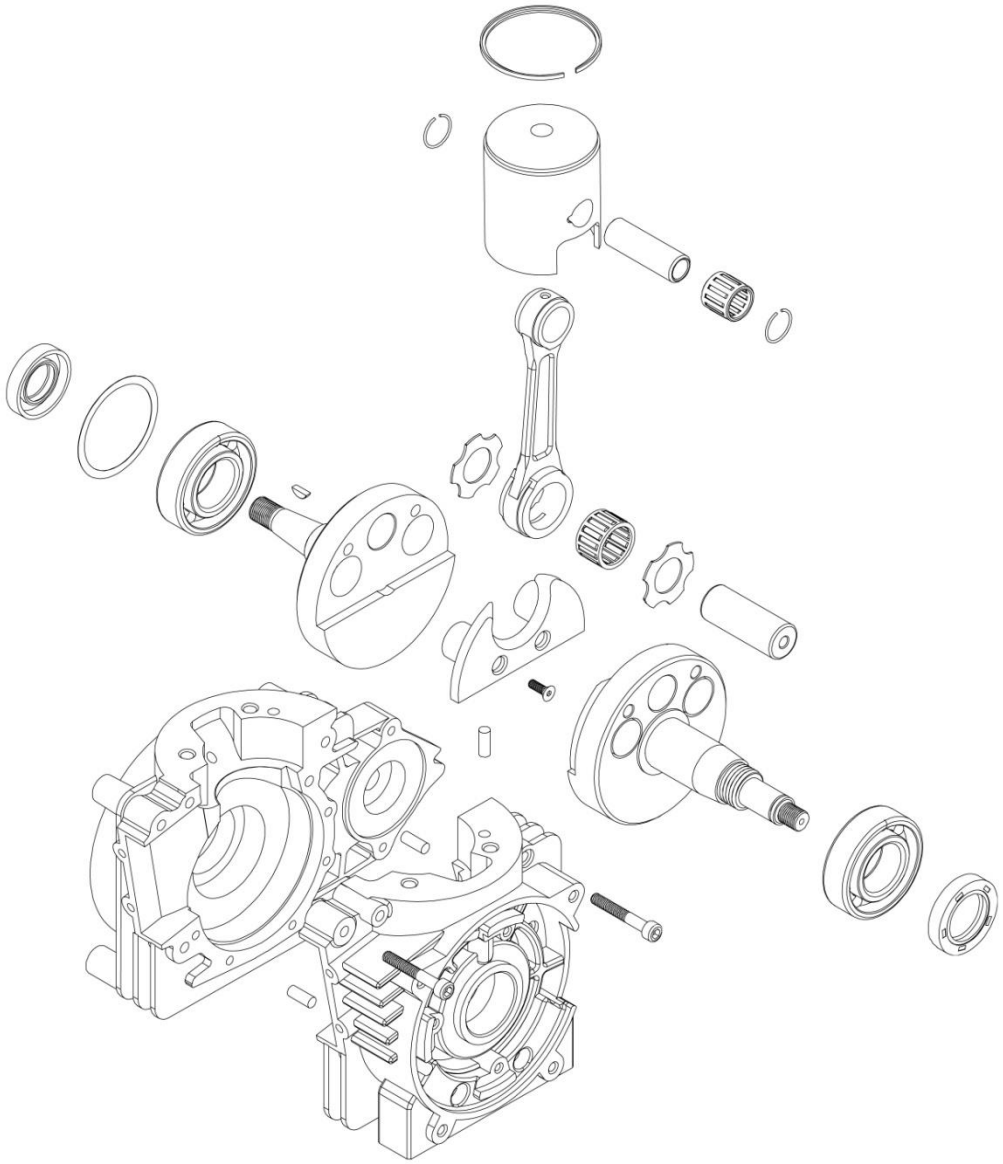

...Section D.2

DRAWING OF THE PISTON (MAIN DIMENSIONS incl. tolerances)

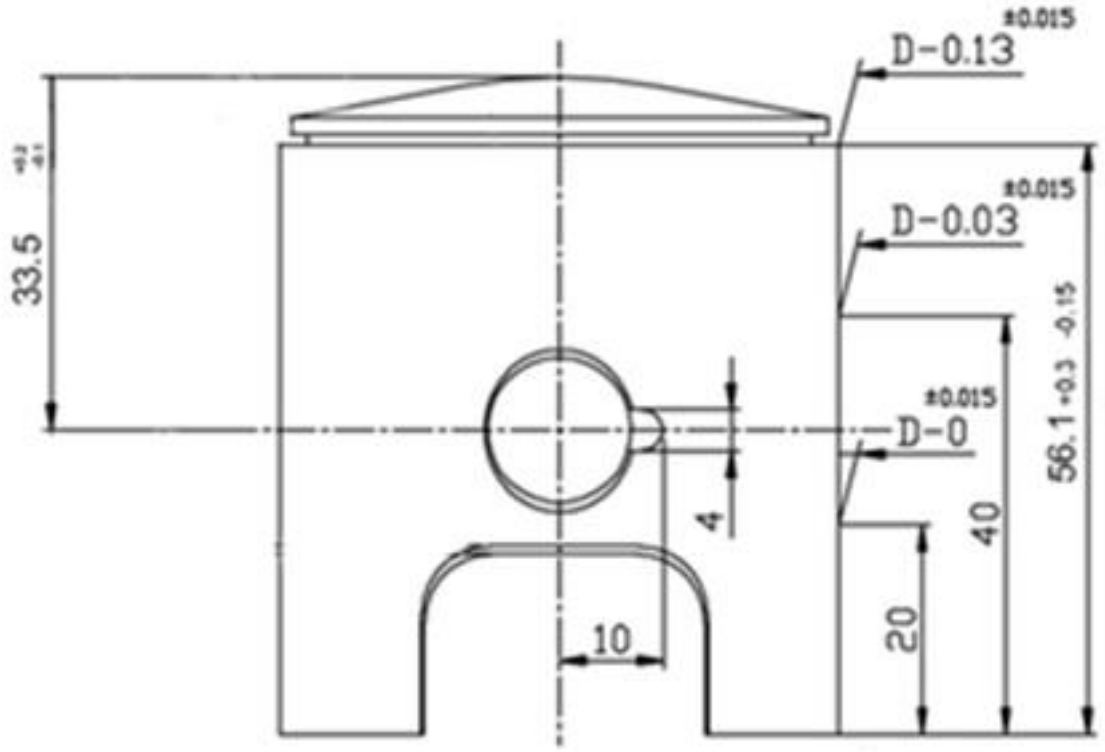

PHOTO OF THE CONROD	PHOTO OF THE CONROD
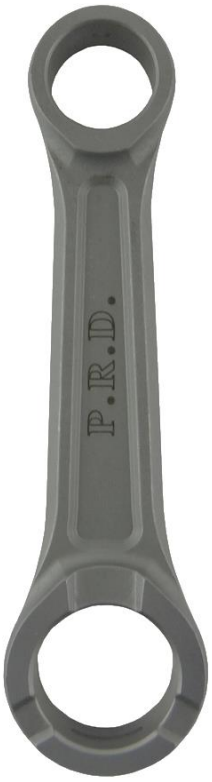 **PRE 2018**	 **POST 2018**
DRAWING OF THE CONROD	**DRAWING OF THE CONROD**
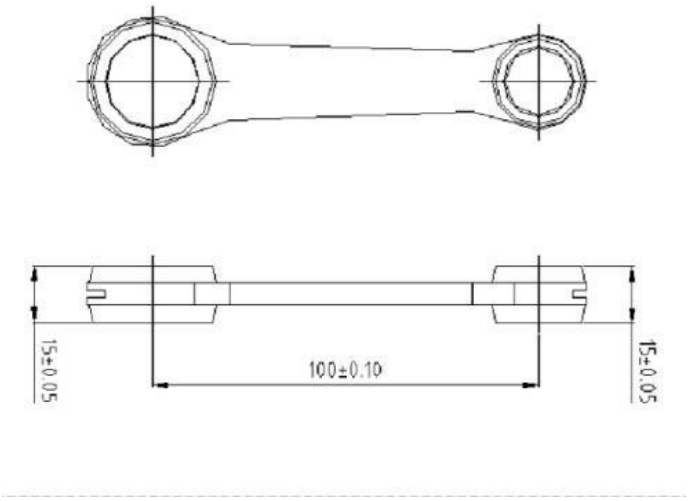 **PRE 2018**	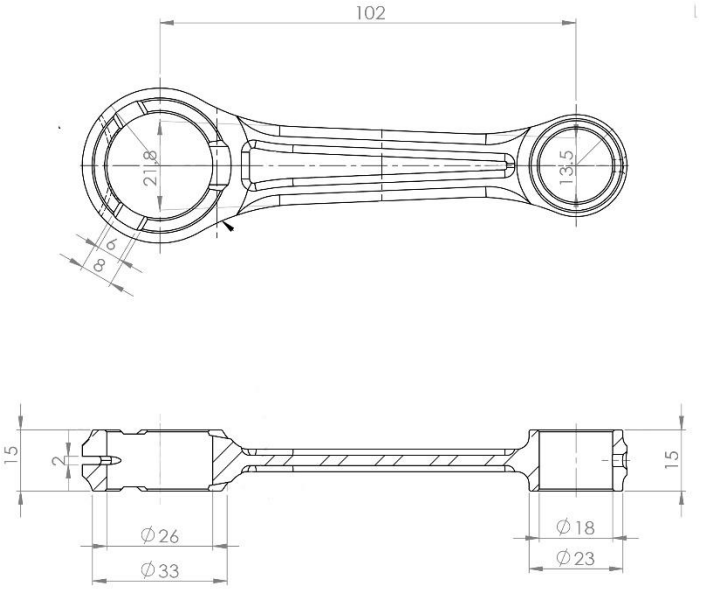 **POST 2018**

...Section D.2

PHOTO OF THE CRANKSHAFT & CONROD	PHOTO OF THE CRANKSHAFT & CONROD
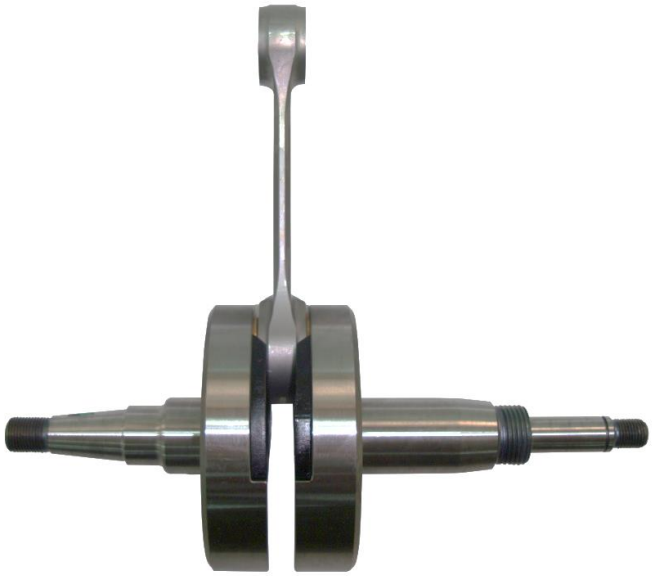 PRE 2018	 POST 2018
DRAWING OF THE COMPLETE CRANKSHAFT	**DRAWING OF THE COMPLETE CRANKSHAFT**
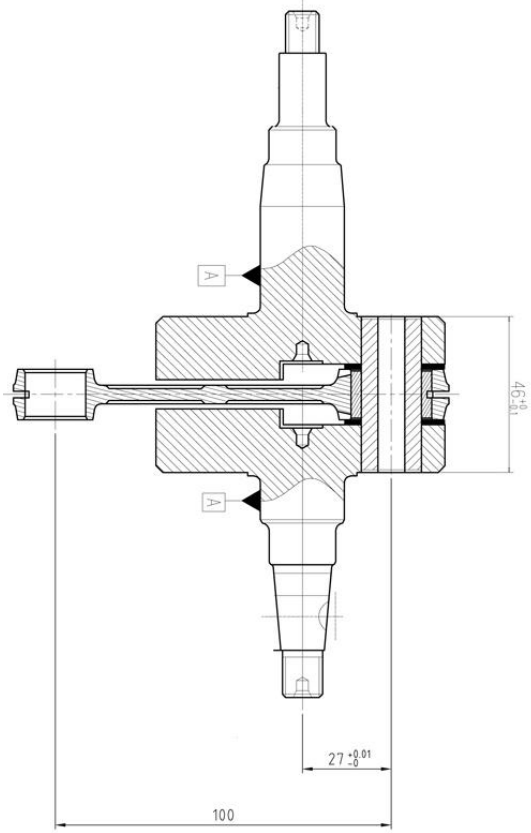 PRE 2018	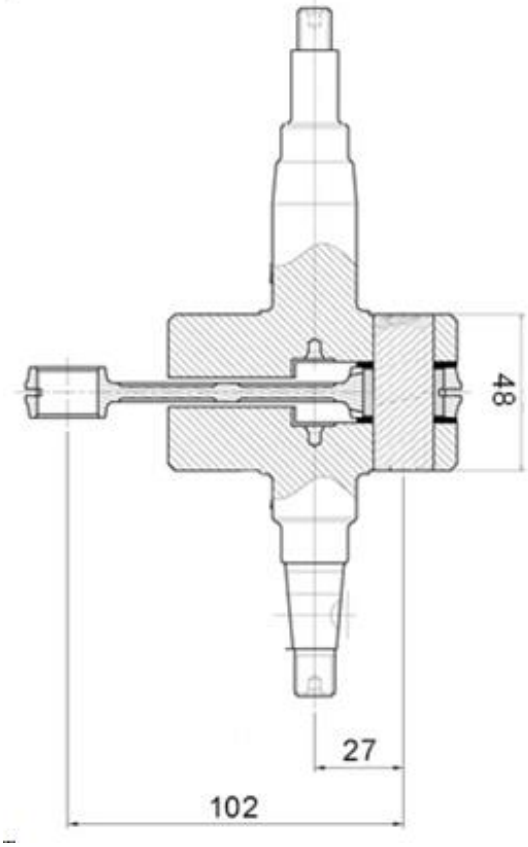 POST 2018

PHOTO OF THE INSIDE OF THE RH CRANKCASE	PHOTO OF THE INSIDE OF THE LH CRANKCASE
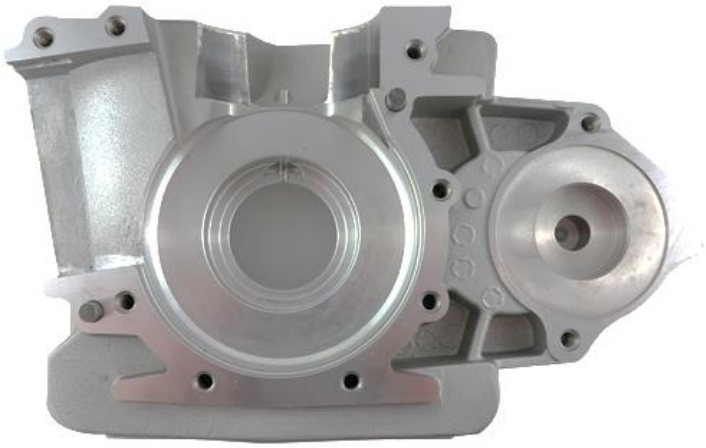 PRE 2018	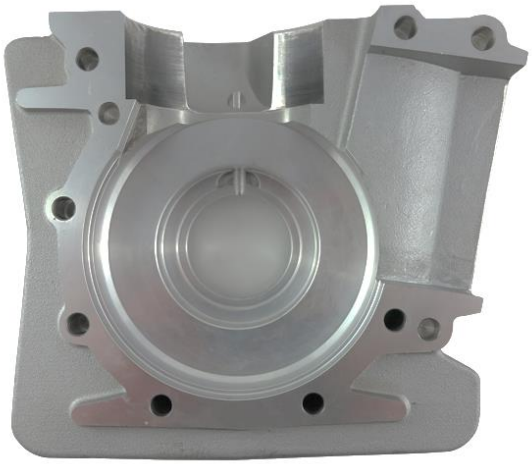 PRE 2018
PHOTO OF THE INSIDE OF THE RH CRANKCASE	**PHOTO OF THE INSIDE OF THE LH CRANKCASE**
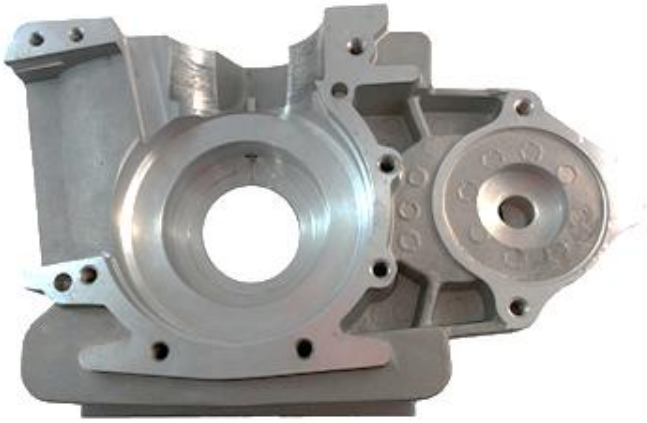 POST 2018	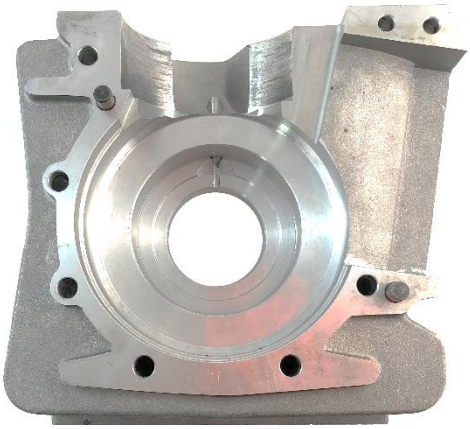 POST 2018 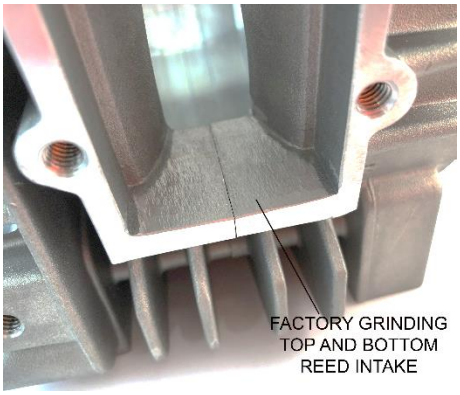

D.4 *REED VALVE & CLUTCH*

DRAWING (exploded view) OF THE CLUTCH ASSEMBLY

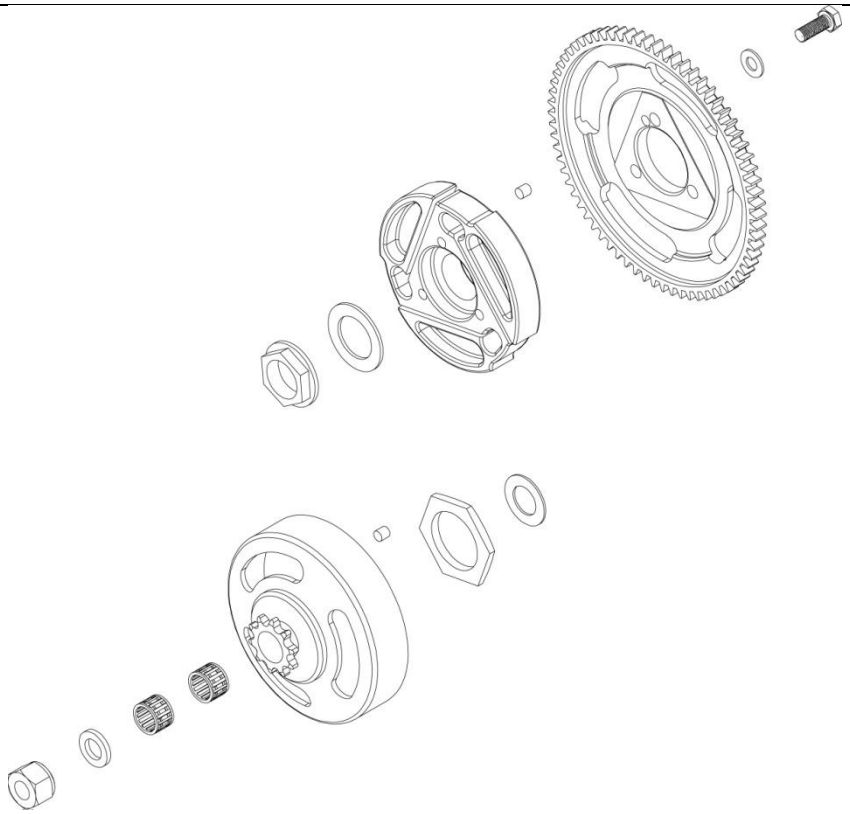

PRE 2019

DRAWING (exploded view) OF THE CLUTCH ASSEMBLY

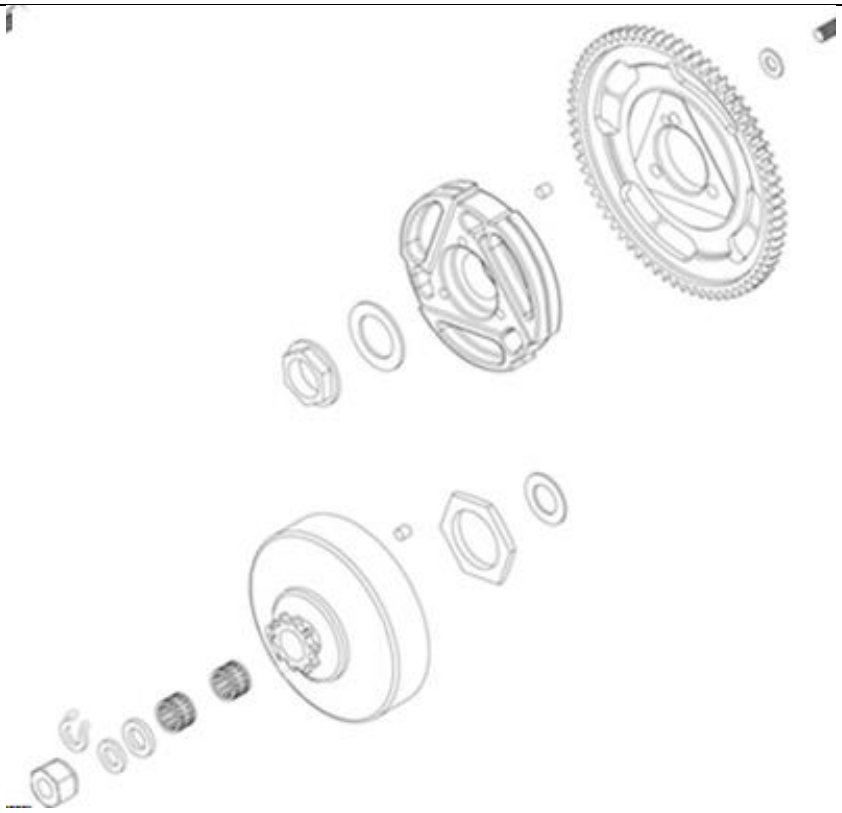

POST 2019

... Section D.4

EXTERNAL PHOTO OF THE CLUTCH DRUM	INTERNAL PHOTO OF THE CLUTCH DRUM
 **PRE 2019**	 **PRE 2019**
EXTERNAL PHOTO OF THE CLUTCH DRUM	**INTERNAL PHOTO OF THE CLUTCH DRUM**
 **POST 2019**	 **POST 2019**

EXTERNAL PHOTO OF THE CLUTCH CENTRE	INTERNAL PHOTO OF THE CLUTCH CENTRE
	
EXTERNAL PHOTO OF THE CLUTCH DRUM	**INTERNAL PHOTO OF THE CLUTCH DRUM**

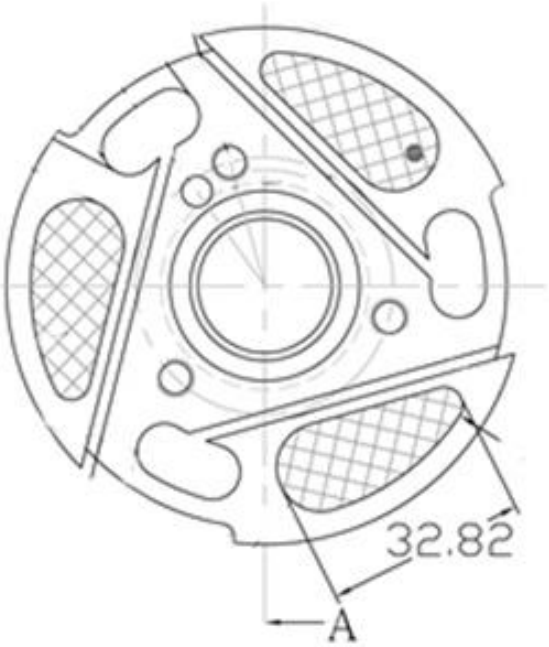

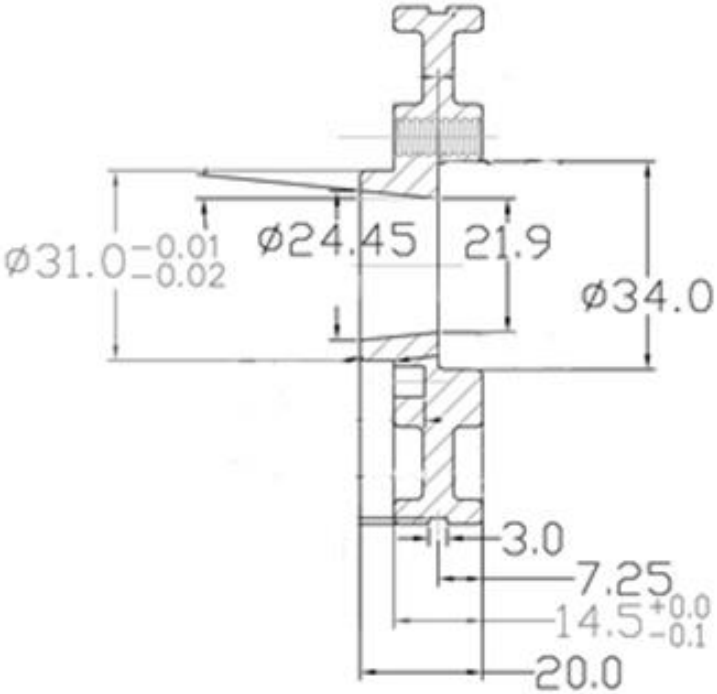

D.4 *REED VALVE & CLUTCH*

TECHNICAL DRAWING (exploded view) OF THE REED VALVE

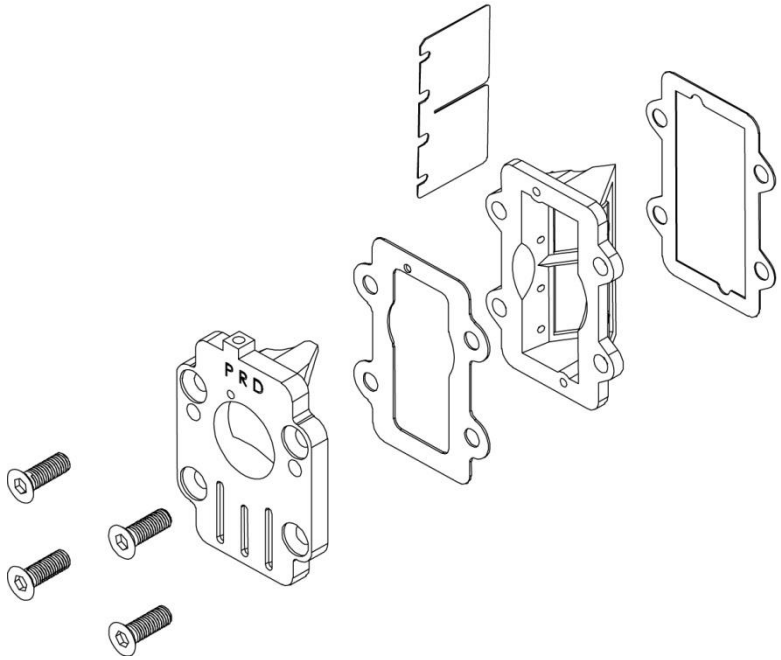

PRD FIBREGLASS OR PRD CARBON FIBRE PETALS ONLY
PRE 2018

TECHNICAL DRAWING (exploded view) OF THE REED VALVE

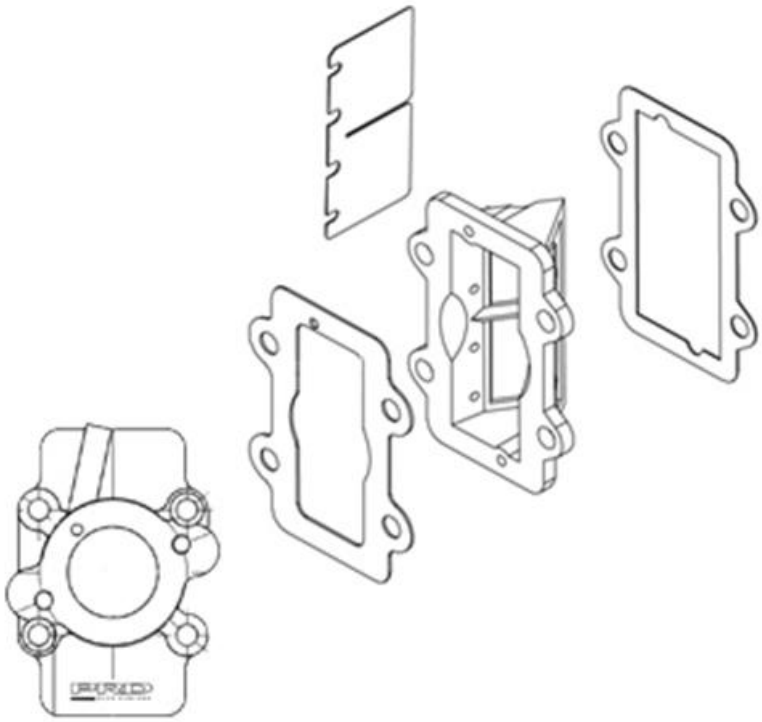

REED PETAL MARKED PRD
POST 2018

DRAWING OF THE REED VALVE
(DIMENSIONS incl. tolerances)

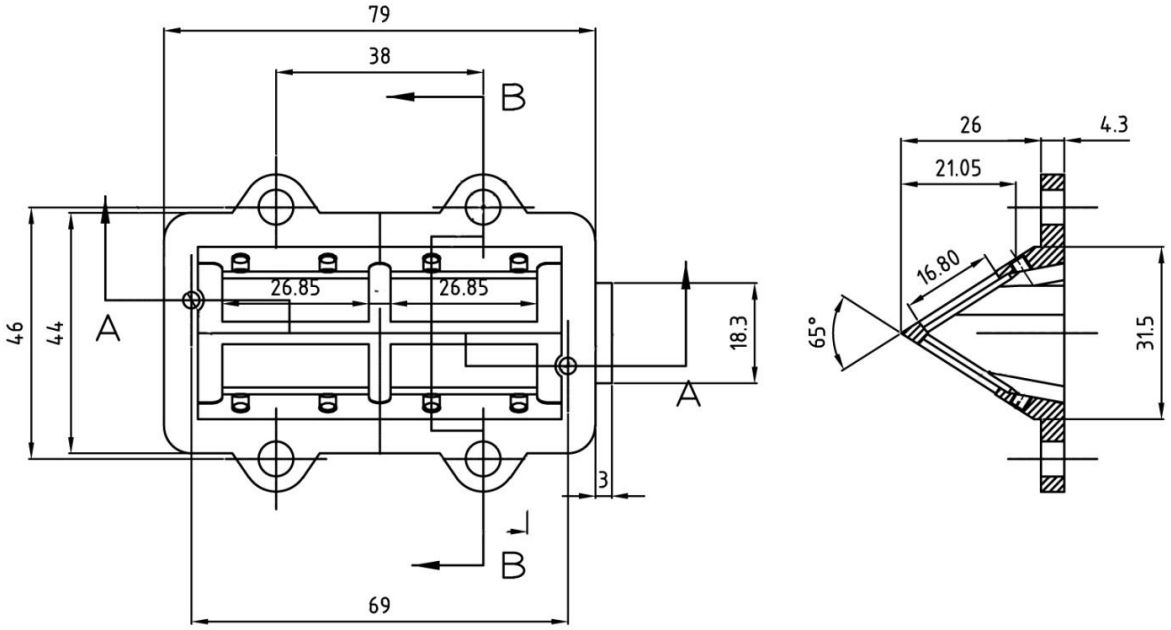

PRE 2018

DRAWING OF THE REED VALVE COVER
(Only basic engine)

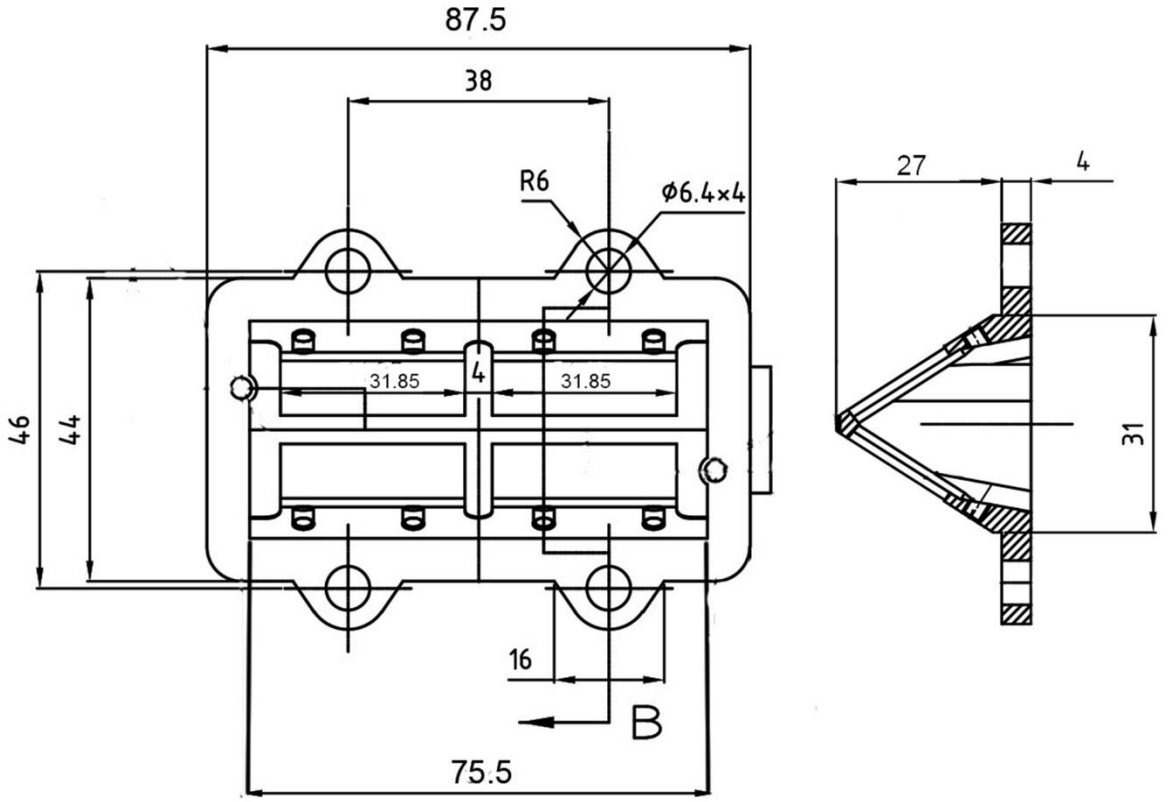

POST 2018

DRAWING OF THE REED VALVE
(DIMENSIONS incl. tolerances)

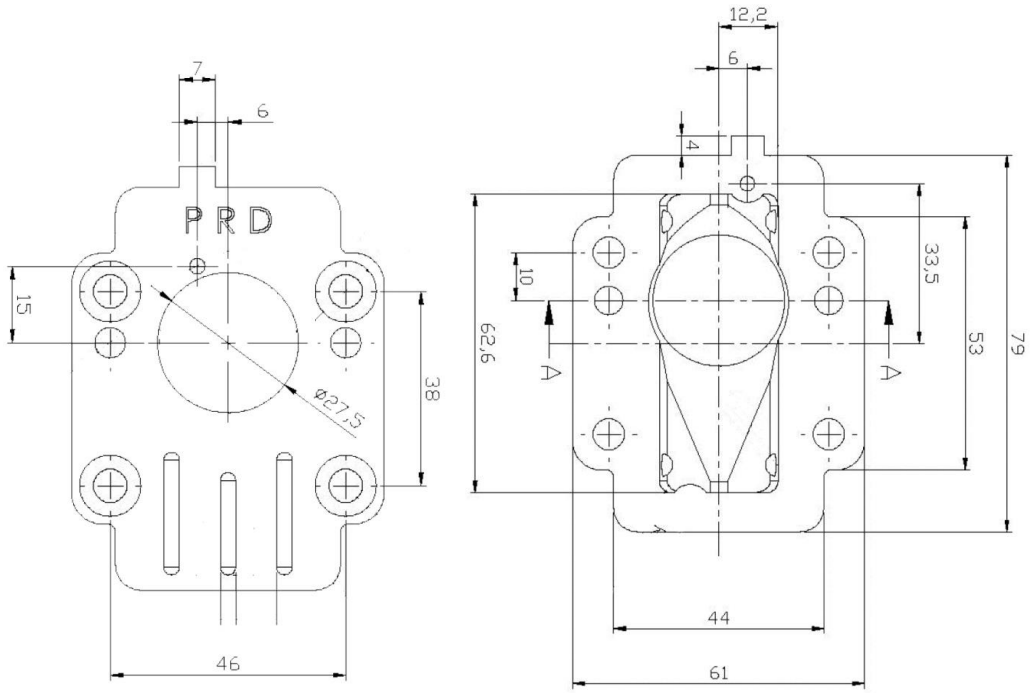

PRE 2018

DRAWING OF THE REED VALVE COVER

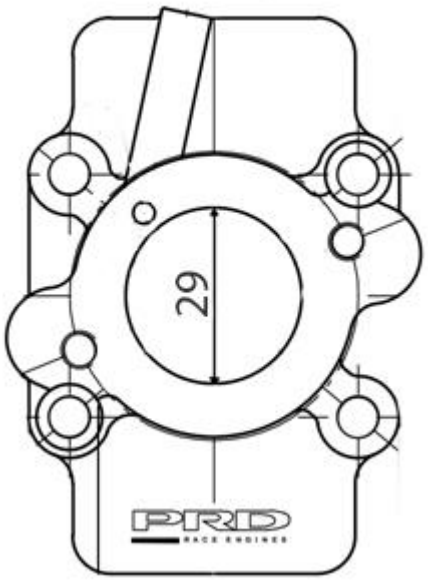

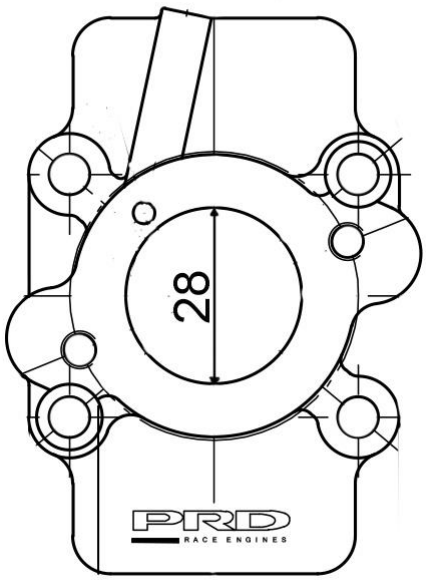

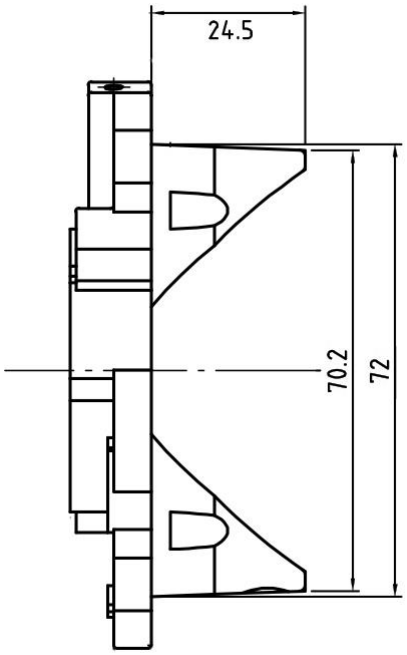

2024

D.5 EXHAUST SYSTEM

PHOTO & DRAWING OF THE EXHAUST MANIFOLD	INTERNAL PROFILE OF THE EXHAUST DUCT DRAWING – WITH DIMENSIONS
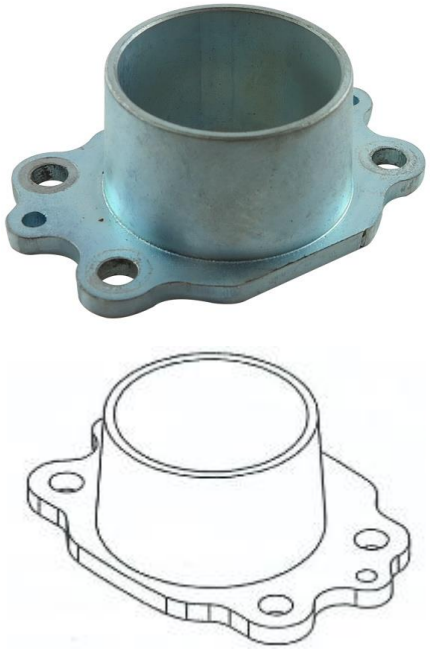	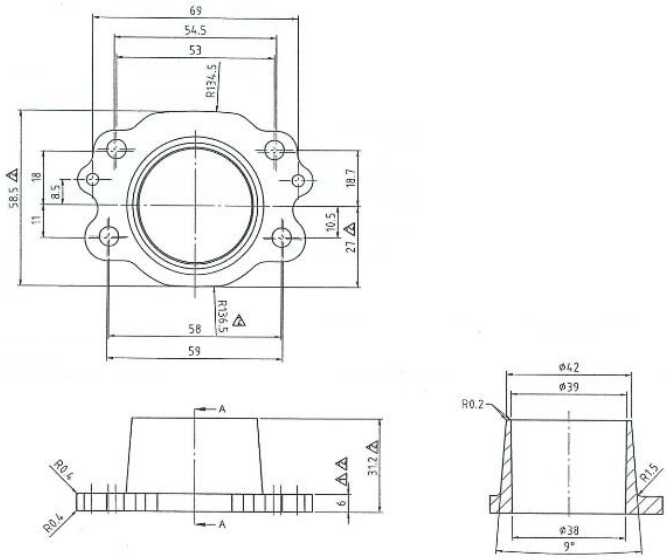

PHOTO OF THE EXHAUST

... Section D.5

TECHNICAL DESCRIPTIONS OF THE EXHAUST (Art. 8.9.3 of HR)

Weight in g	**2280**	*Minimum*
Volume in cc	**4150**	*+/-5 %*

TECHNICAL DRAWING

It must include all the information necessary to build this exhaust.

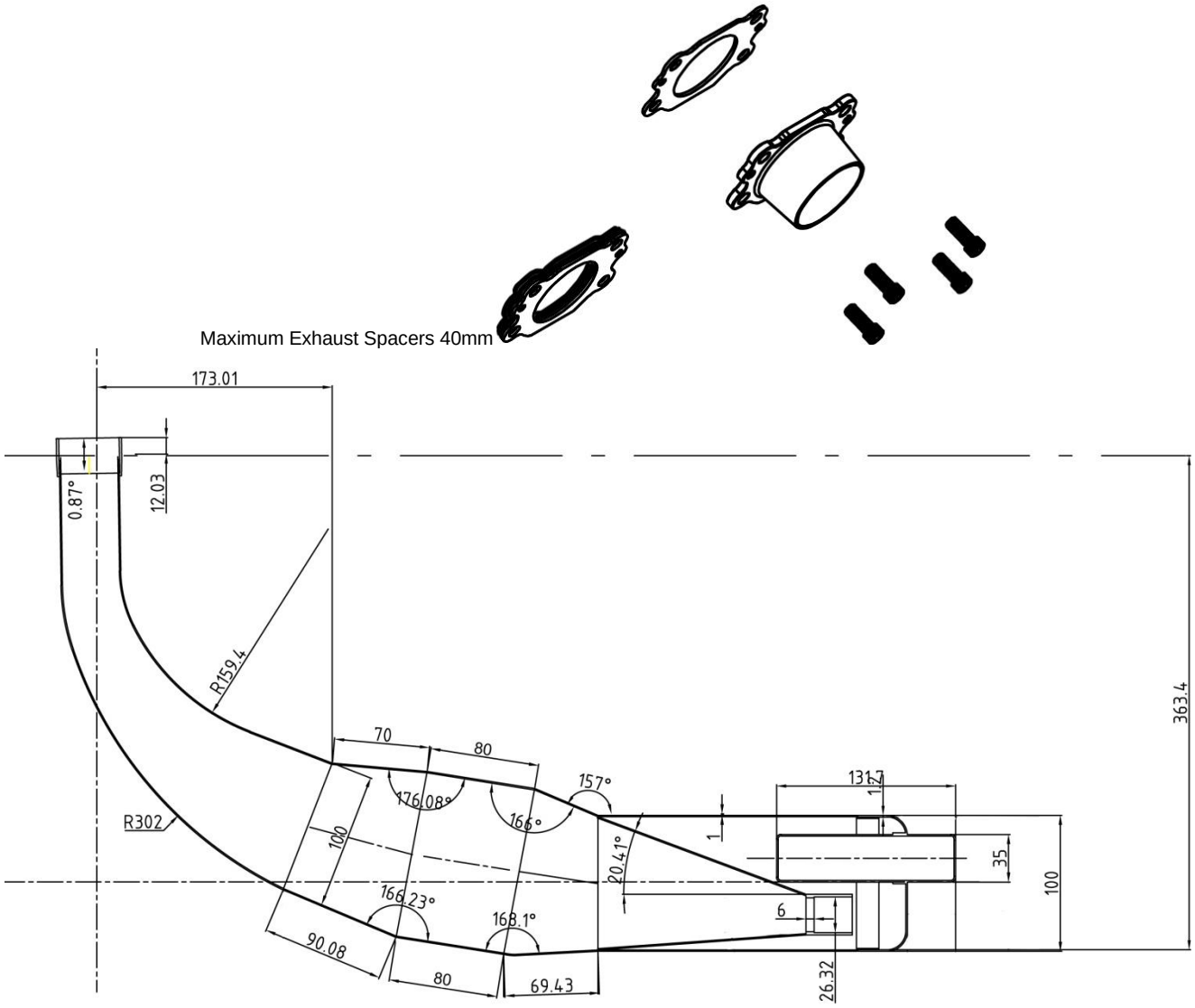

SPEC 1

TECHNICAL DRAWING

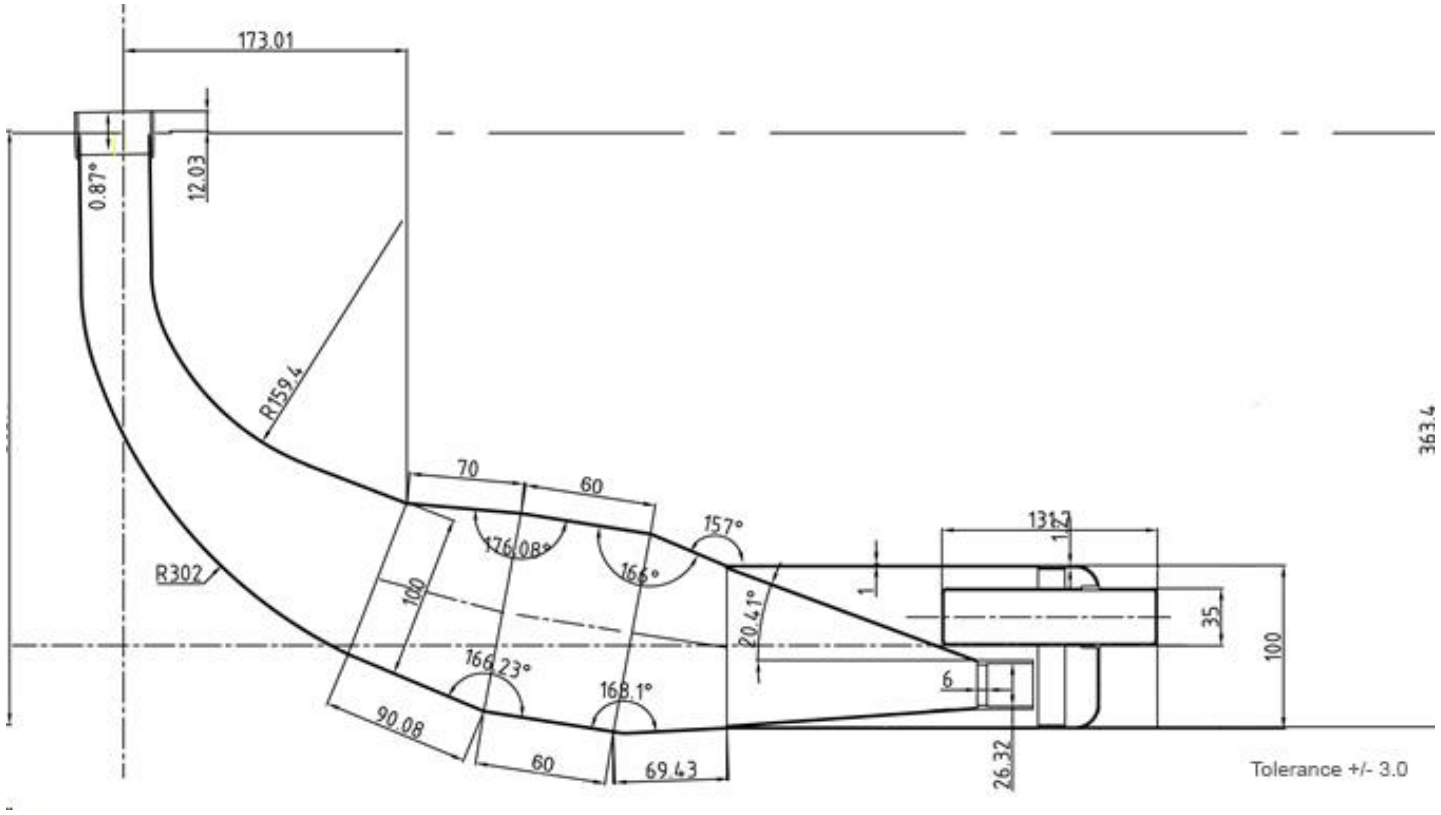

SPEC 2

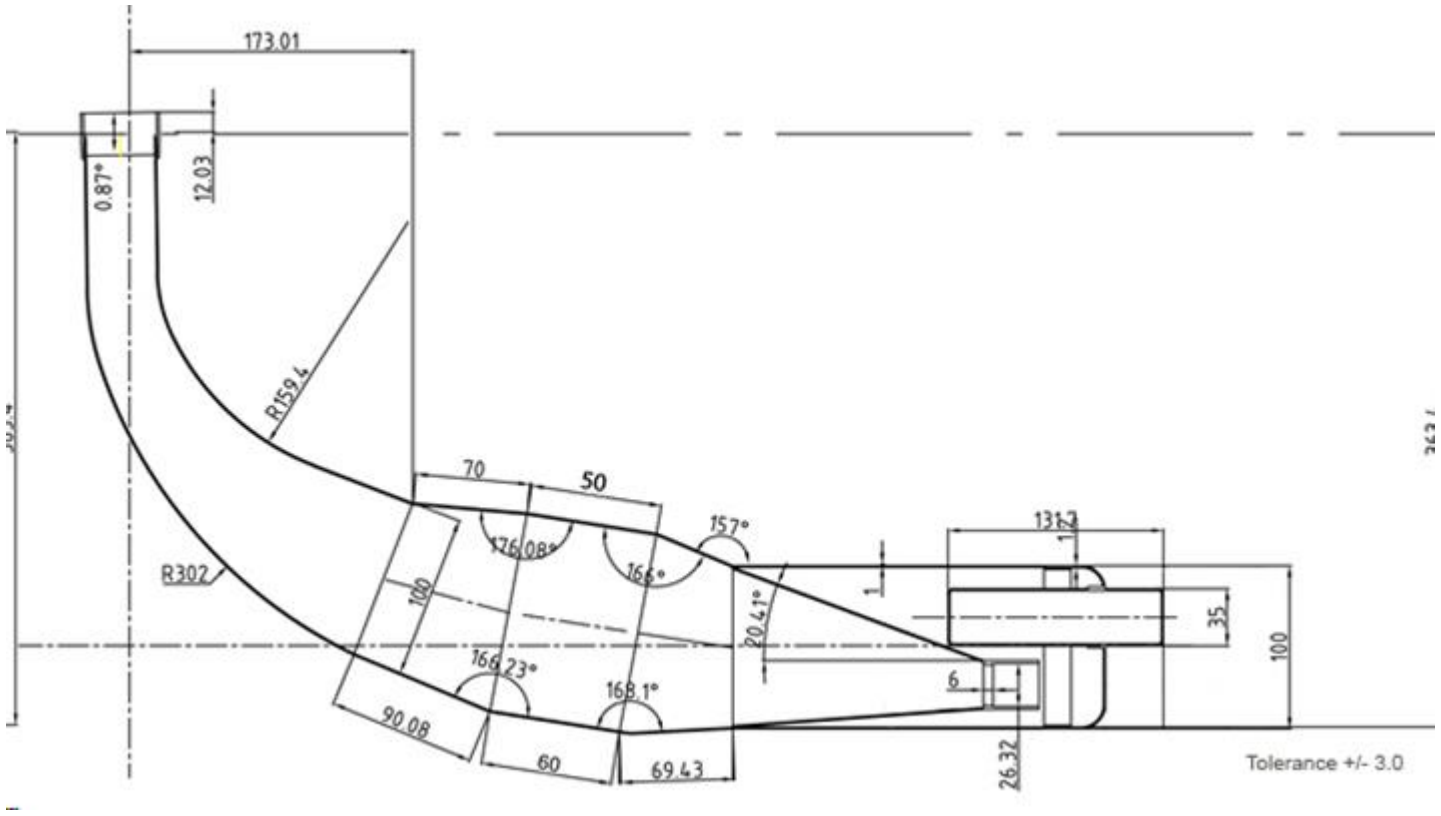

SPEC 3

TECHNICAL DRAWING

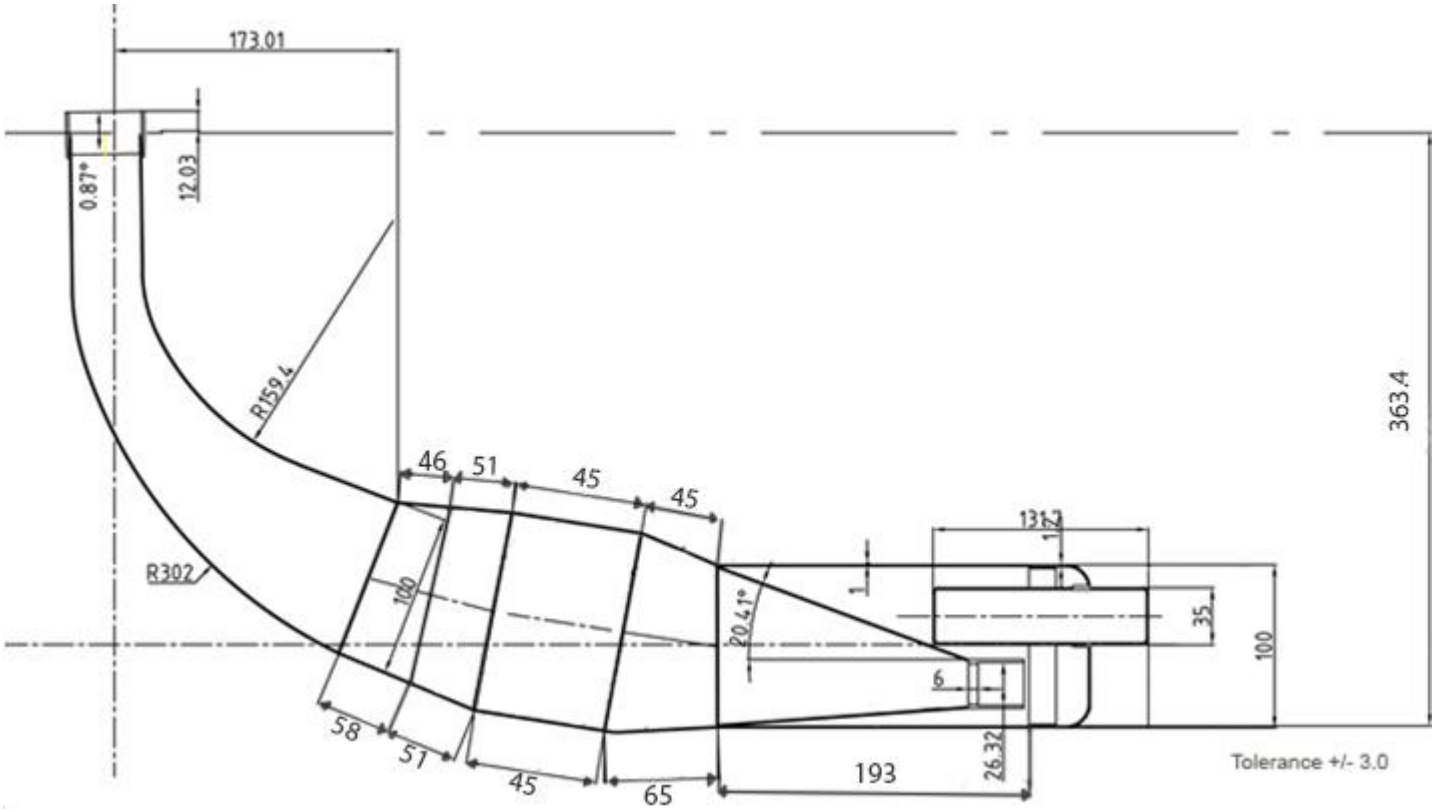

SPEC 4

D.6 *STARTER*

EXPLODED DRAWING OF THE STARTING UNIT AND OF ITS HOUSING

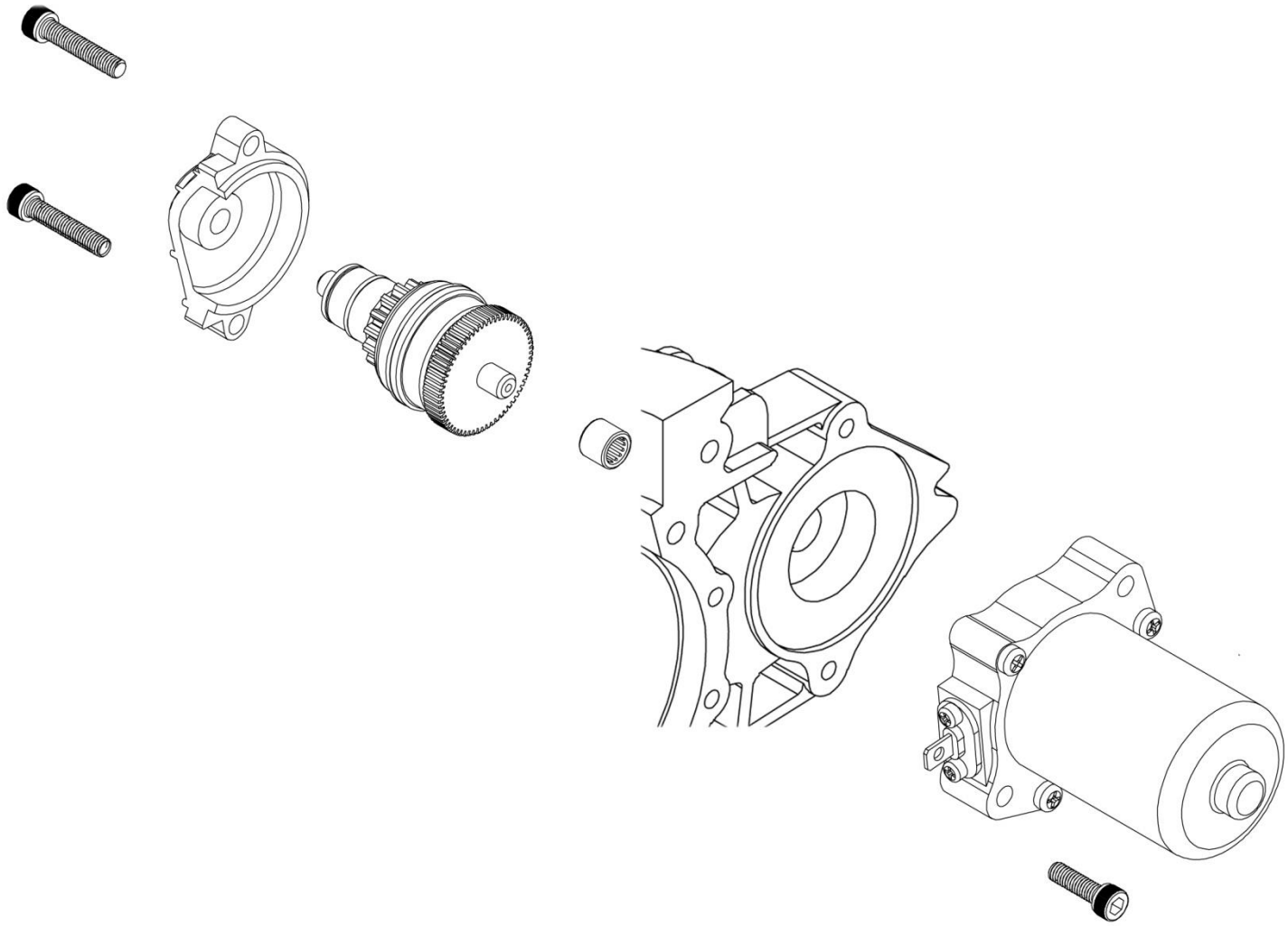

D.7 *CARBURETTOR*

EXPLODED DRAWING OF THE CARBURETTOR

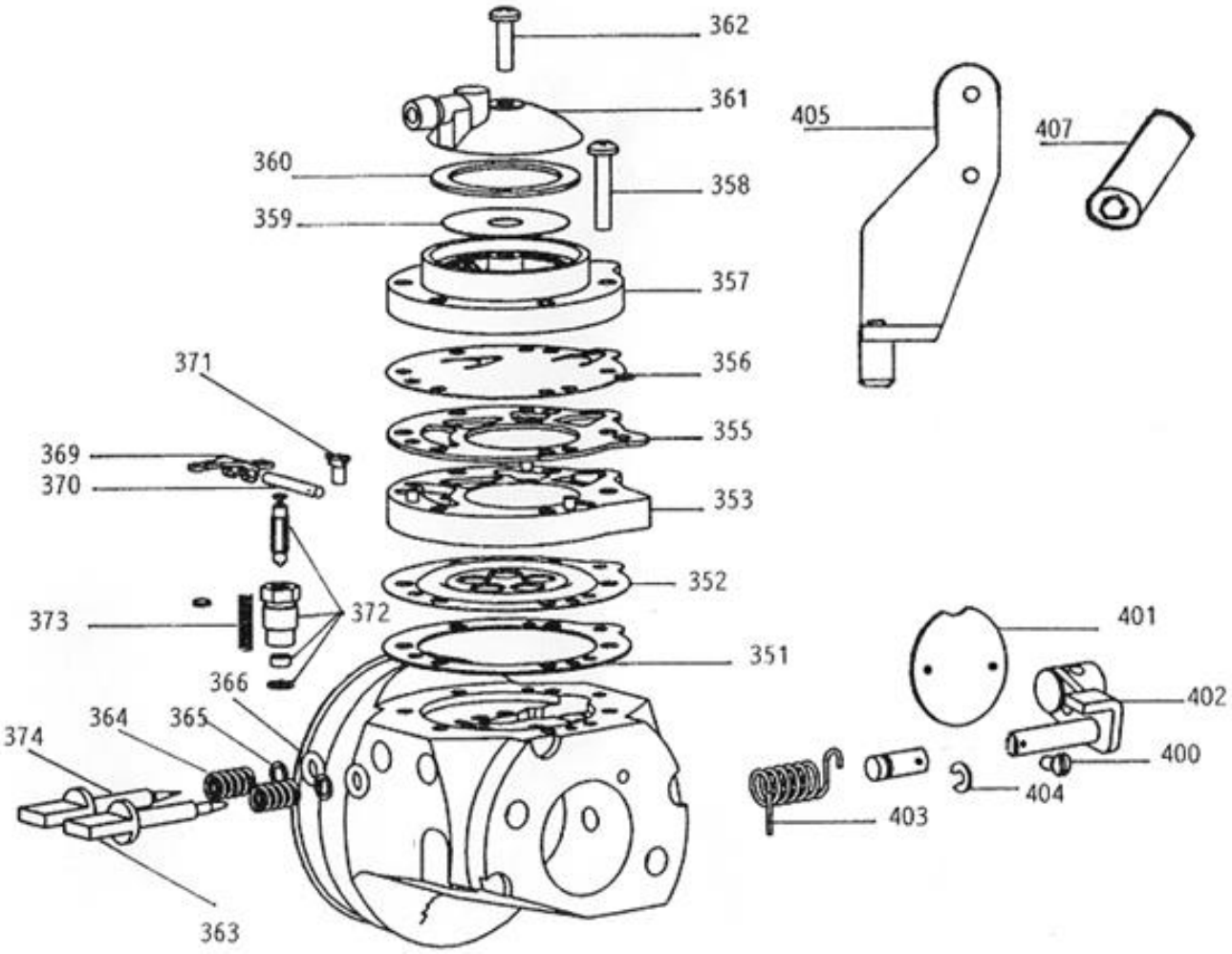

IBEA L9 PRD

... Section D.7

PHOTO OF THE CARBURETTOR
(Including markings)

Must be marked PRD L9

DRAWING OF THE CROSS SECTION OF THE CARBURETTOR
(Including passage dimension)

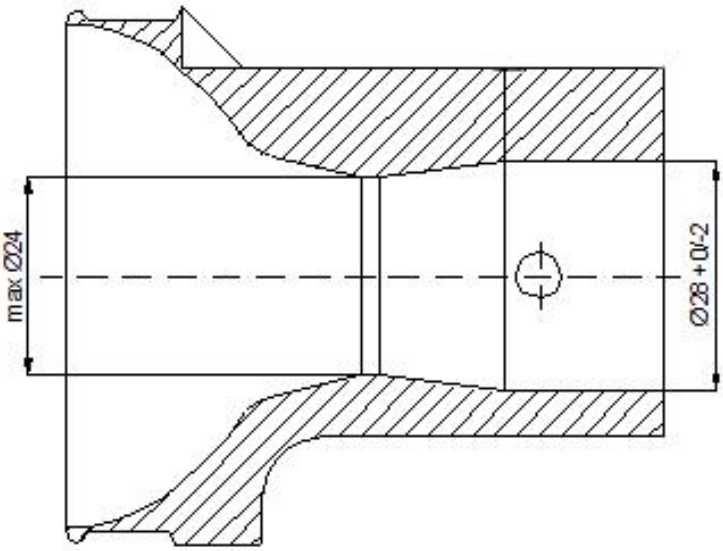

D.7 CARBURETTOR

EXPLODED DRAWING OF THE CARBURETTOR

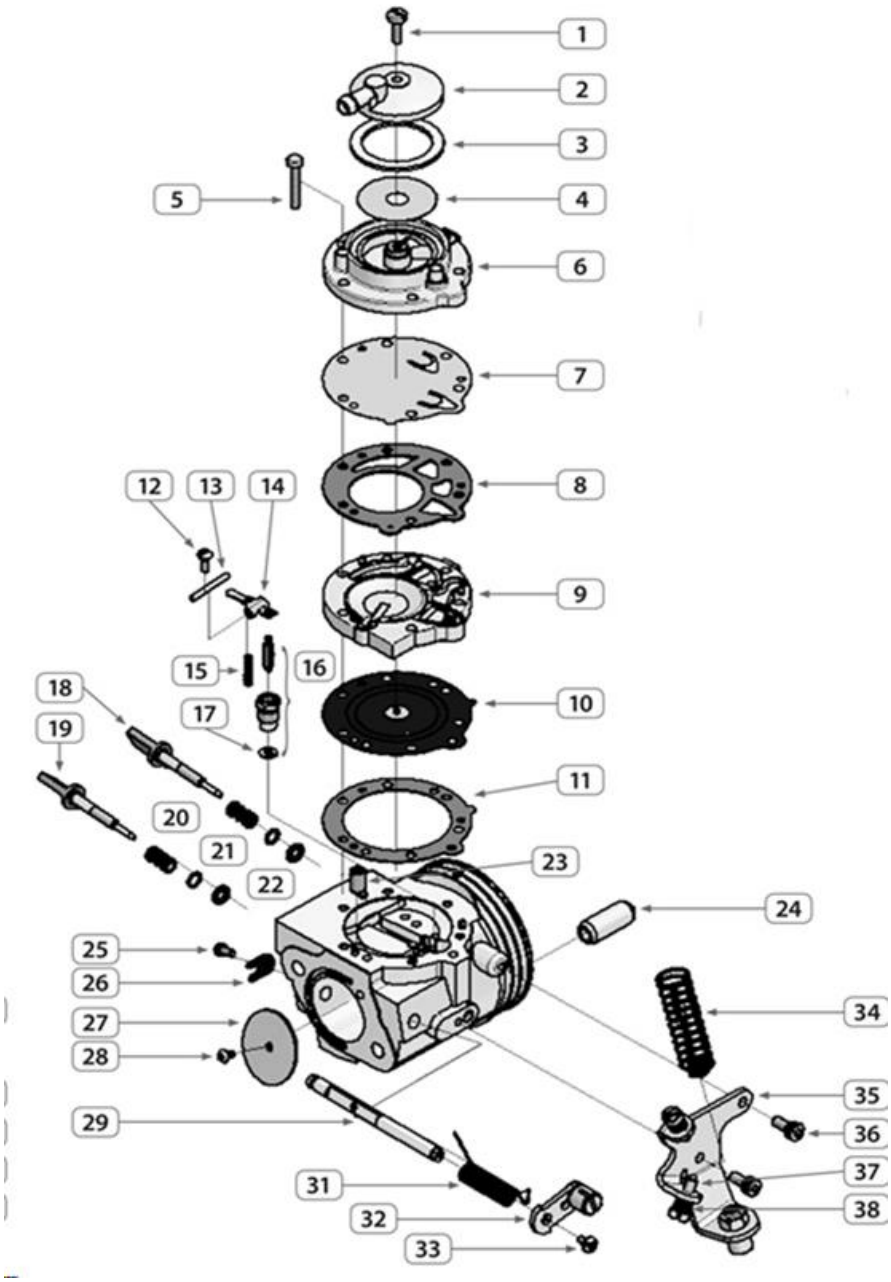

TILLOTSON HW-30A & HW-32A PRD

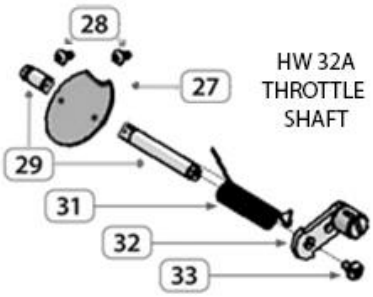

PHOTO OF THE CARBURETTOR
(Including markings)

TILLOTSON HW-30A PRD

DRAWING OF THE CROSS SECTION OF THE CARBURETTOR
(Including passage dimension)

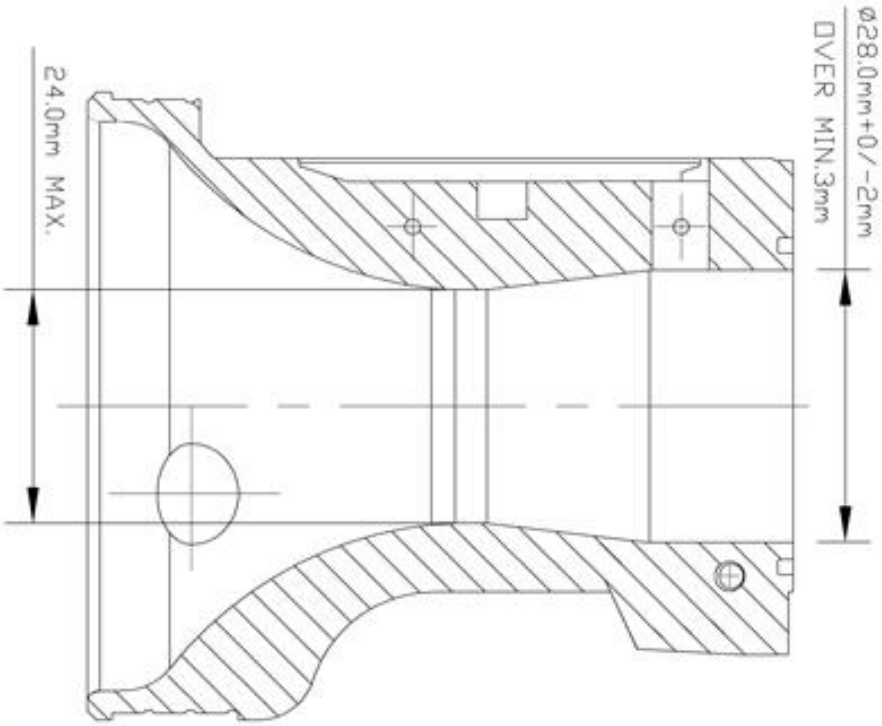

TILLOTSON HW-30A PRD

PHOTO OF THE CARBURETTOR
(Including markings)

TILLOTSON HW-32A PRD

DRAWING OF THE CROSS SECTION OF THE CARBURETTOR
(Including passage dimension)

TILLOTSON HW-32A PRD

DRAWING OF THE CROSS SECTION OF THE CARBURETTOR
(Including passage dimension)

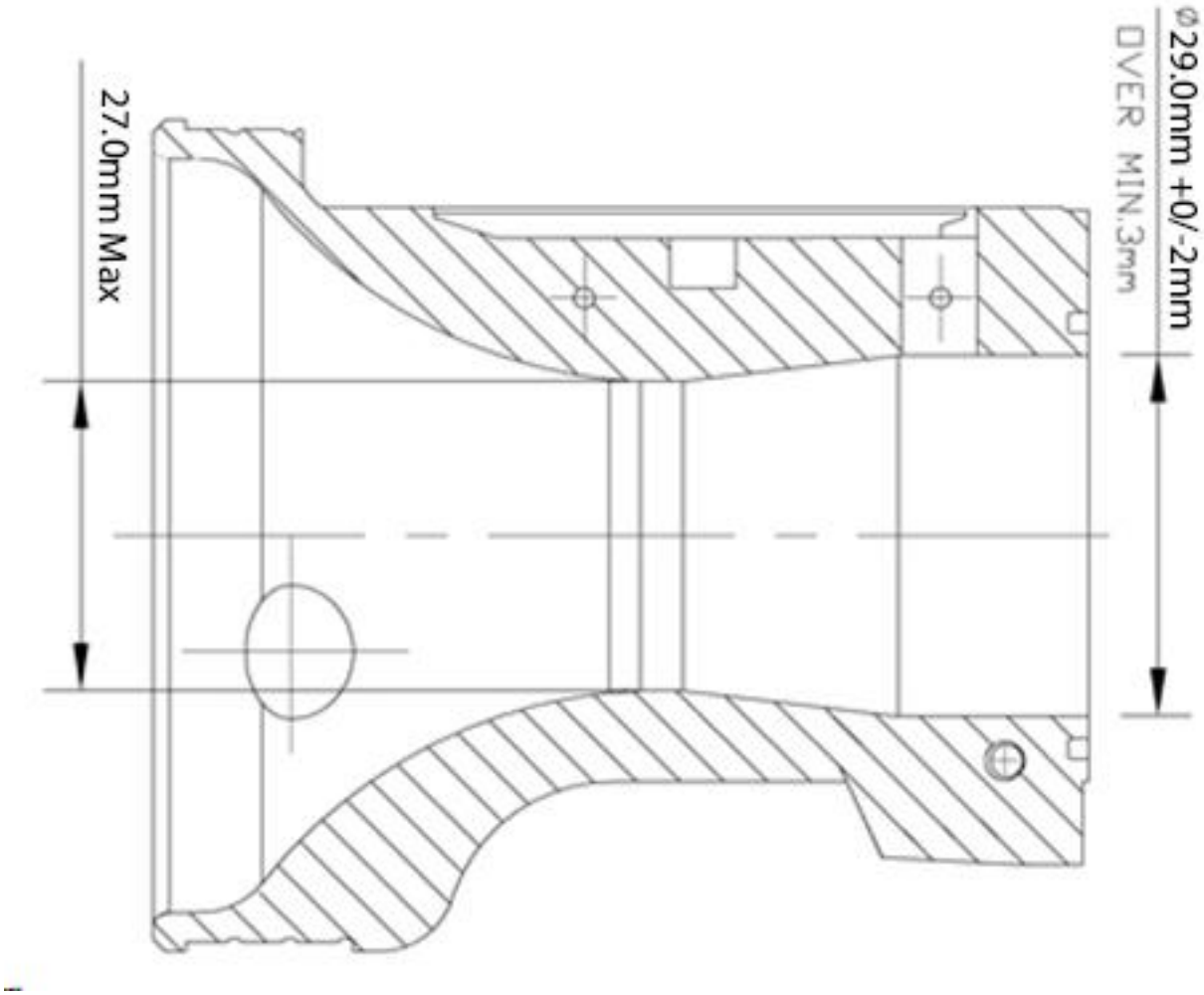

TILLOTSON HW-32A PRD

D.8 *ELECTRICAL SYSTEM*

IGNITION SYSTEM

ADVANCE CURVE GRAPHS

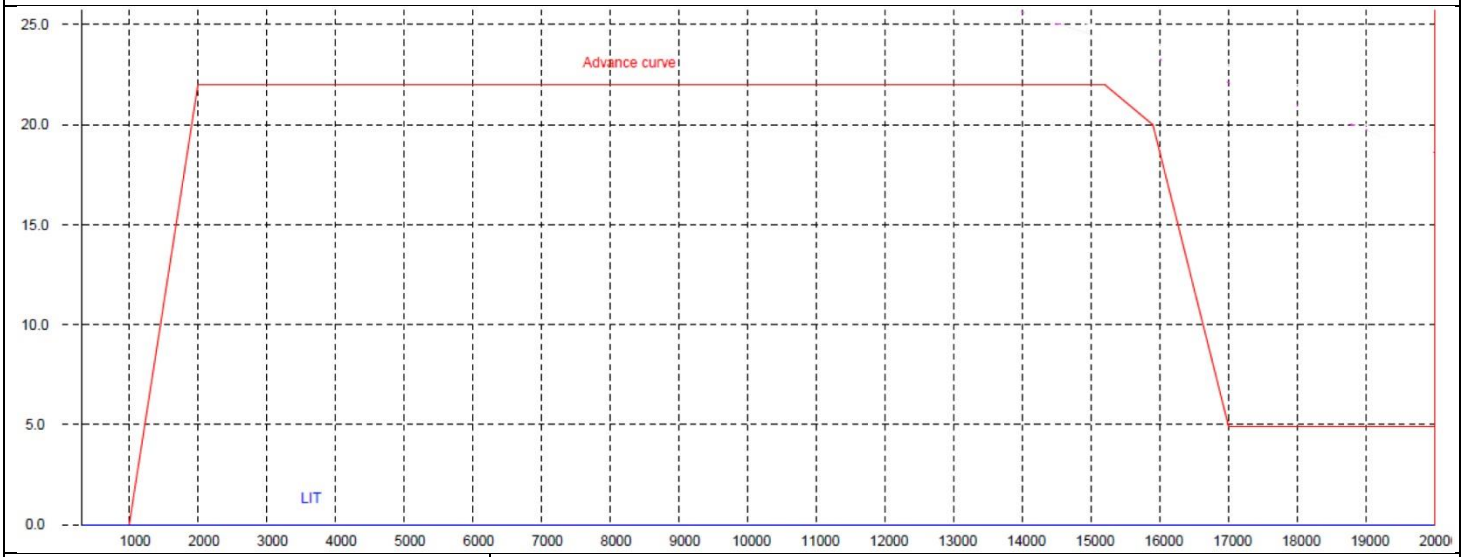

Ignition Coil No.	PVL 590 221
Ignition Stator No.	PVL 1045
Ignition Rotor No.	PVL 500 990
Ignition Plug Cap No.	PVL 401 222
Or PRD Easy Start Ignition	PRD0073ES19

Tr/min	*1000*	*2000*	*3000*	*4000*	*5000*	*6000*	*7000*	*8000*	*10000*	*12000*	*14000*	*15200*	*15900*	*17000*
° adv	*0*	*22*	*22*	*22*	*22*	*22*	*22*	*22*	*22*	*22*	*22*	*22*	*20*	*5*

COIL	COIL
 PVL PRD GREEN COIL 590 221	 PVL PRD RED COIL 590 222
STATOR	**ROTOR**
 PVL PRD STATOR	 PVL PRD ROTOR

CRANK SENSOR	COIL
 PRD EASY START CRANK SENSOR WITH IGNITION PLATE	  PRD EASY START COIL
ROTOR	**CDI MODULE**
 PRD EASY START ROTOR	 PRD EASY START CDI MODULE

... Section D.9

PHOTO OF THE RADIATOR

DRAWING OF THE RADIATOR
(Including dimensions)

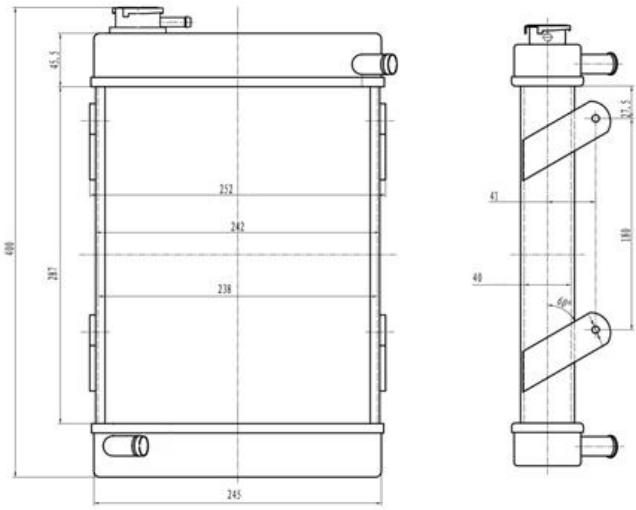

PRE 2019 TOP INLET BENT

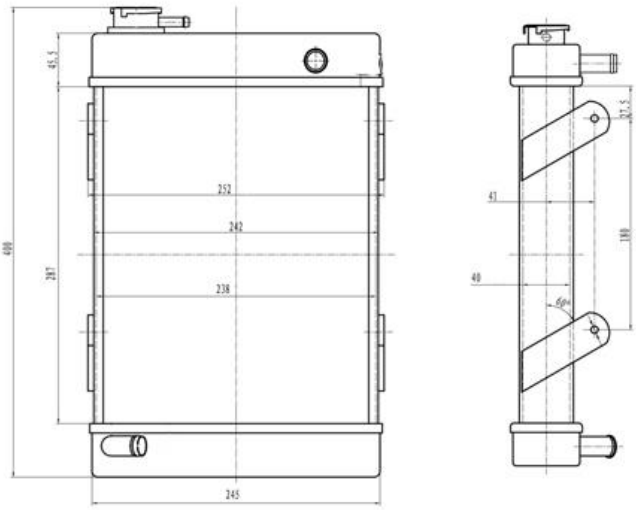

POST 2019 TOP INLET STRAIGHT

Section D.10

PHOTO OF THE AIRBOX

PRE 2021 RED & YELLOW FILTER PERMITTED

Permitted Modification	The only permitted modification is the drilling of a drain hole – maximum 6mm diameter at the front centre line and the lowest point of the air box.
Rain Cover	The fitting of a rain cover is optional. Type of rain cover is free.

DRAWING OF THE AIRBOX
(Including dimensions)

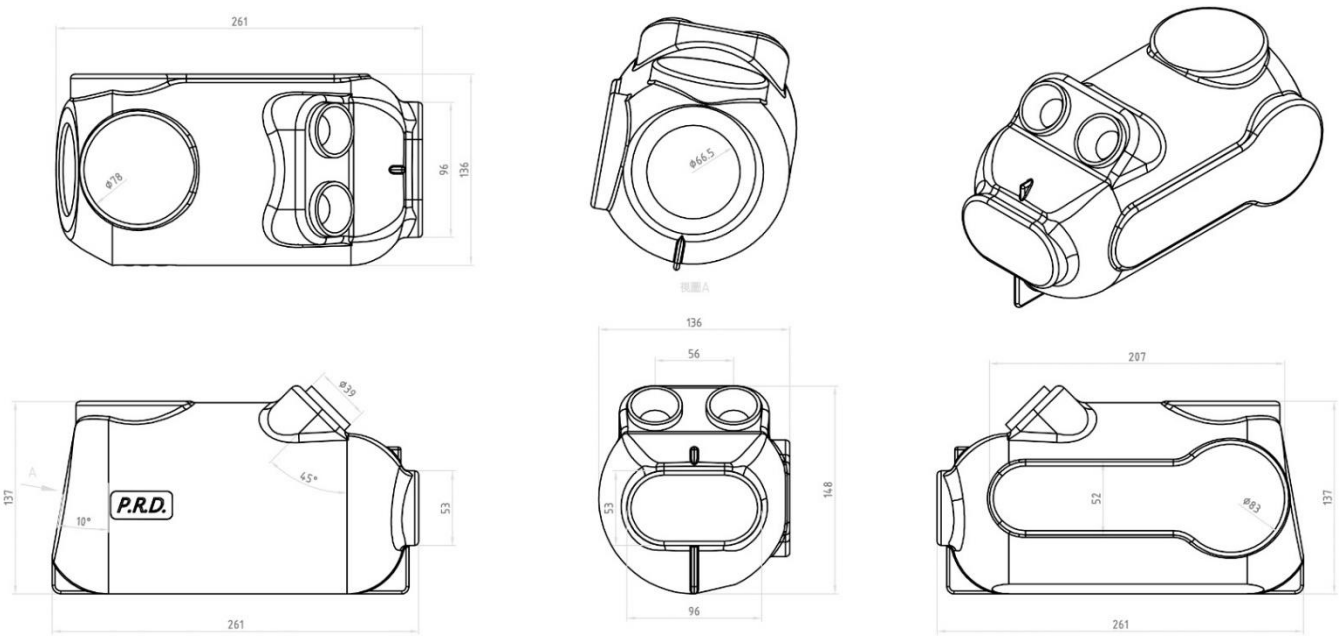

PHOTO OF THE AIRBOX

POST 2021 RED AND YELLOW FILTER PERMITTED

Permitted Modification	The only permitted modification is the drilling of a drain hole – maximum 6mm diameter at the front centre line and the lowest point of the air box.
Rain Cover	The fitting of a rain cover is optional. Type of rain cover is free.

DRAWING OF AIRBOX
(Including dimensions)

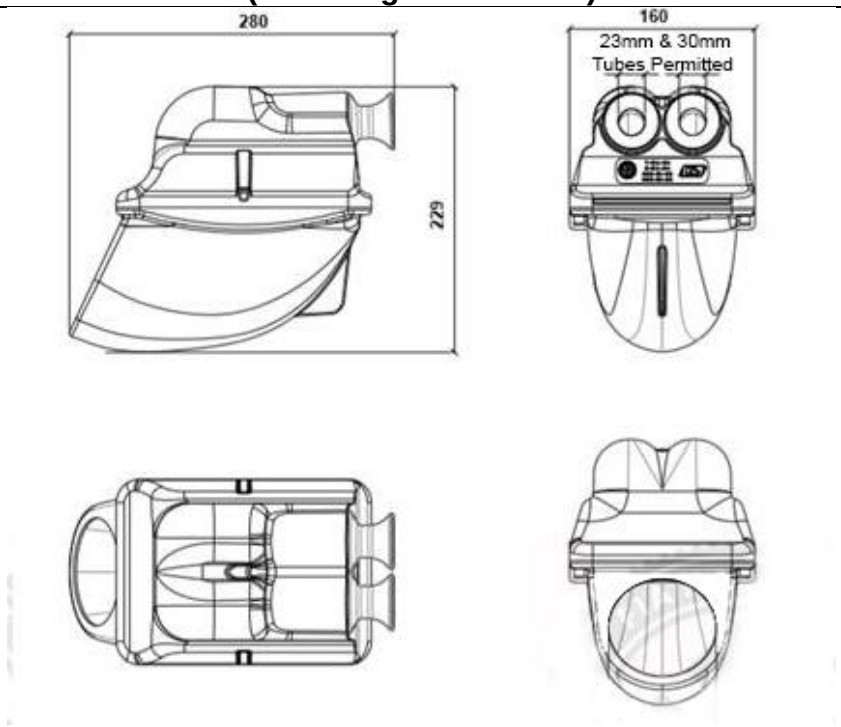

Appendix A to the PRD Galaxy Homologation.

The following notes are additional to the details contained in these homologation documents for the PRD Galaxy engine (the "**Engine**") and are to be read in conjunction with the specifications and details contained therein; they form part of the Homologation Documents for the Engine.

The Engine must always be used and presented in strict conformity with the specifications, tolerances and appearance detailed in the Homologation Documents. The engine must be Manufactured by PRD and have been distributed in Australia by St George Kart Centre Wholesale Pty Ltd.

Unless otherwise expressly permitted by Karting Australia, and/or specified as a NON-TECHNICAL component, the Engine must use only PRD Original Equipment Manufacturer (OEM) parts in accordance with this Homologation Document.

UNLESS IN THE KARTING AUSTRALIA RULES AND/OR THESE HOMOLOGATION DOCUMENTS IT SAYS THAT YOU CAN DO SOMETHING, THEN YOU CANNOT.

The terms "***Post 2021***" and "***Pre 2021***" appearing in this document relate to the date of rehomoloagtion of the engine – 11 October 2021. For the sake of clarity, "*Post 2021*" should be taken to mean after 11 October 2021. "*Pre 2021*" should be taken to mean before 11 October 2021.

Neither the Engine nor any of its ancillary components may be modified other than in accordance with the Rules and these Homologation documents.

Any removal, addition or polishing of material is strictly forbidden. Sandblasting, glass bead blasting, vapor blasting, wet blasting, liquid honing, peening, acid etching, spark eroding and/or any other method of metal removal or displacement is not allowed. For the sake of clarity, some factory deburring may be exhibited on the ports of the cast iron liner. No additional grinding is permitted to the ports or the port passages.

The use of thermal barrier coatings/ceramic coatings on or in the Engine/Engine components and on or in the Exhaust components is prohibited.

The use of anti friction coatings on or in the Engine/Engine components is prohibited. OEM pistons are exempt.

Non-Technical Items

1. Unless otherwise specified, non-technical items are to be of the same type and style as the original. No alteration from the original manufacturer specifications is permitted to fit a Non-technical item.
2. Stickers that may be removed when requested by the Scrutineer are allowed on the Engine, induction silencer and radiator.
3. Engraving, stamping or marking an Engine for identification purposes is permitted on the external surfaces of the motor or its components. Any such engraving, stamping or marking must not obscure any homologation or identification markings on the Engine or its ancillary components.
4. Non-technical components for the PRD Galaxy Engine include:
   Seals, O Rings, Circlips, Fasteners, Washers, Water Hoses, Hose Clamps, Water Pump, Water Pump Pulley, Water Pump Drive Belt, Radiator Brackets, Radiator Overflow Bottle, Thermostats, Switches, Bearings, Springs, Airbox Rain Cover.

Update Log

Date	Section	Pages
11/10/2021	Engine Images Updated	1-7
11/10/2021	Technical Information A – Updated from Bulletin 100H 1-4	8 - 9
11/10/2021	D.2 – Tolerances on Piston Drawing Updated.	17
11/10/2021	D.2 – Images of Crankshaft Assembly Updated	18 - 19
11/10/2021	D.4 – Clutch Drum with vents removed added.	17 - 22
11/10/2021	D.4 – Clutch Centre, additional images and more detailed drawings added.	23
11/10/2021	D.5 – Spec 3 Exhaust Added.	29
11/10/2021	D.7 – Tillotson Carb Exploded Diagram Added	34
11/10/2021	D.8 – PVL Ignition Images Added + PVL 590 222 Added	37
11/10/2021	D.8 – PRD Easy Start Images Added	38
11/10/2021	D.9 – Updated Radiator Image	39
11/10/2021	D10 – Images and Drawing of PRD Airbox Added.	40
11/10/2021	D10 – Images and Drawing of PRD Airbox 2021	41
11/10/2021	Appendix A	42
01/01/2024	A – Minimum weight of crankshaft updated.	8
01/01/2024	B – Opening Angle Corrected.	9
01/01/2024	D.1 – Exhaust Duct Tolerance Updated.	15
01/01/2024	D.4 – Dimension change to Reed Manifold.	26
01/01/2024	D.5 – Spec 4 Exhaust Added.	30
01/01/2024	D.7 – HW-32A PRD Carb Added.	34 & 36
01/01/2024	D.10 – Air Filter Clarified.	42 & 43