Technical Document
No. TD-001
Technical Regulations for KZ2

Document Number	TD-001	Reviewed By CEO
Drafted By	National Technical Commissioner	Approved by CEO on 23 December 2015 Scheduled Review Date 31 December 2016
Version	V3-23 12 15	
Implementation Date	**Immediate**	

These Technical Regulations ('Regulations') are to be read in conjunction with Class Rules Chapter 17 of the 2016 Karting Australia Manual. For the avoidance of doubt, these Regulations are supplementary to the Rules and are to provide additional specific technical information for the KZ2 Class.

It is the Competitors responsibility to have at all times a copy of the Homologation documents relating to the engine and exhaust in use by the Competitor. It is advisable that a copy of the documents be provided to the Australian Kart Championship Chief Technical Officer for reference.

If upon technical inspection the Competitor cannot supply the documents for inspection and / or a copy is not in the possession of KA, the engine shall be deemed ineligible for Competition / practice and the Competitor shall be removed from any Competition results, the Competitor shall take no further part in the Competition / practice and may face further action by the Stewards.

1.1 Engine type

a) Water-cooled single-cylinder engine with reed-valve intake, one (1) circuit only, homologated by the CIK-FIA.

1.2 Modifications

a) Any modification is forbidden if it is not explicitly authorised by an article of these Regulations or for safety reasons decided by the CIK-FIA or KA.
b) By modification it is meant any operations likely to change the initial aspect, the dimensions, the drawings or the photographs of an original homologated part represented on the Homologation Form.
c) Cylinder head may be repaired and/or modified to a maximum tolerance of -0.2mm of the dimension on the Homologation Form. The minimum volume of the Combustion chamber is 13 cc, measured in accordance with KA cc measuring method.
d) It is permitted to replace the spark plug thread with a heli-coil.

1.3 Exhaust Angle Opening

a) The total exhaust opening angle is a Maximum of 199°, irrespective of the value indicated on the Homologation Form.
b) The method for measuring the total exhaust opening angle is with a graduated degree wheel with a Minimum diameter of 200 mm, or with a digital device.

1.4 Spark Plug

a) The spark plug make is free.
b) The body of the spark plug (electrodes not included) tightened on the cylinder head, must not extend beyond the upper part of the dome of the combustion chamber.
c) Spark plug must comply with the images in Appendix 1 of these Regulations.

1.5 Ignition

a) It is permitted to add a mass to the ignition rotor.
b) The mass must fixed by at least two (2) screws
c) The Homologated ignition rotor must not be modification.
d) The use of any variable ignition system (system of progressive advance and delay) is not permitted.

1.6 Exhaust

a) Must be the Homologated exhaust for the engine being used.
b) The magnetic steel sheet metal must have a Minimum thickness must be 0.75mm.

1.7 Exhaust Silencer

a) From January 1 2017, the Exhaust Silencers must be CIK-FIA Homologated and approved for use by KA.

1.8 Power unit

a) It must not be possible to disassociate the engine from the gearbox. The engine case may only be divided into two (2) parts (vertical or horizontal).

1.9 Reed-valve box

a) The Reed-valve box dimensions and drawing must be in accordance with the CIK-FIA Homologation Document.
b) The Reed-valve box cover is free.

1.10 Carburettor

a) The Dell'Orto VHSH 30 is the only carburetor permitted to be used.
b) Must remain OEM and must not be modified in any way
c) Venturi type diffuser
d) Maximum diameter of 30 mm round
e) The only settings allowed may be made to the following areas:
    i. the slide
    ii. the needle
    iii. the float
    iv. the float chamber
    v. the needle shaft (spray)
    vi. the jets
    vii. the needle kit

    The above adjustments are all subject to all the interchanged parts being of Dell'Orto origin.
f) The incorporated petrol filter and the plate (part No. 28 on the CIK-FIA technical drawing No. 7 appended) may be removed; if they are kept, they must be original.

1.11 Fuel Return Tap

a) A maximum of one (1) fuel return tap is permitted to be fitted.
b) If a fuel return tap is fitted, it must be mounted to the steering wheel or on a bracket mounted to the Chassis below the steering wheel.

1.12 Air Box (Inlet Silencer)

a) Style, type is at the discretion of the Competitor, however it must comply with CIK-FIA Homologations

1.13 Gearbox

a) The Gearbox must be as Homologated by the CIK-FIA, including the primary torque.
b) A Minimum of three (3) and Maximum of six (6) ratios are permitted.

c) Check of the ratios using a graduated disc with a minimum diameter of 200 mm or a digital coder; the degree decimals given on the Homologation Form must be mentioned in tenths of degrees and not in minutes.
d) Hand-operated and exclusively mechanical gearbox control without a servo system.
e) Any system or form of ignition cutting is forbidden.
f)

1.14 Radiator:

a) The radiator style, type and size is at the discretion of the Competitor.

1.15 Tyres

a) Any replacement Tyre, required for any reason other than a manufacturing defect, must come from the Tyres allocated to the Competitor for the event.

1.16 Wheels

The use of wheels complying with the CIK-FIA technical drawing No. 4 (Appendix 2 of these Regulations)

a) Diameter of coupling for tyres: for 5 inch rims: 126.2 mm with a tolerance of +/-1.2 for the circumference with the hump and a tolerance of -1 for the diameter of rims with screws.
b) Width of the tyre housing: 10 mm minimum.
c) External diameter for 5-inch rims: 136.2 mm minimum.
d) Radius to facilitate the balance of the tyre in it's housing: 8 mm.
e) Maximum pressure for assembly: 4 Bar.
f) Tyre burst resistance test with fluid at an 8 Bar pressure.

1.17 Brakes:

a) Front brakes are permitted to be fitted and must be foot operated.
b) Brakes must comply with Technical Rules Chapter 1 Rule 6 of the KA manual.

APPENDIX 1 – Spark Plug

Annexe N°7

Bougies conformes et non-conformes

Liste d'exemples non exhaustive

Appendix No. 7

Spark plugs complying and non-complying

Non-exhaustive list of examples

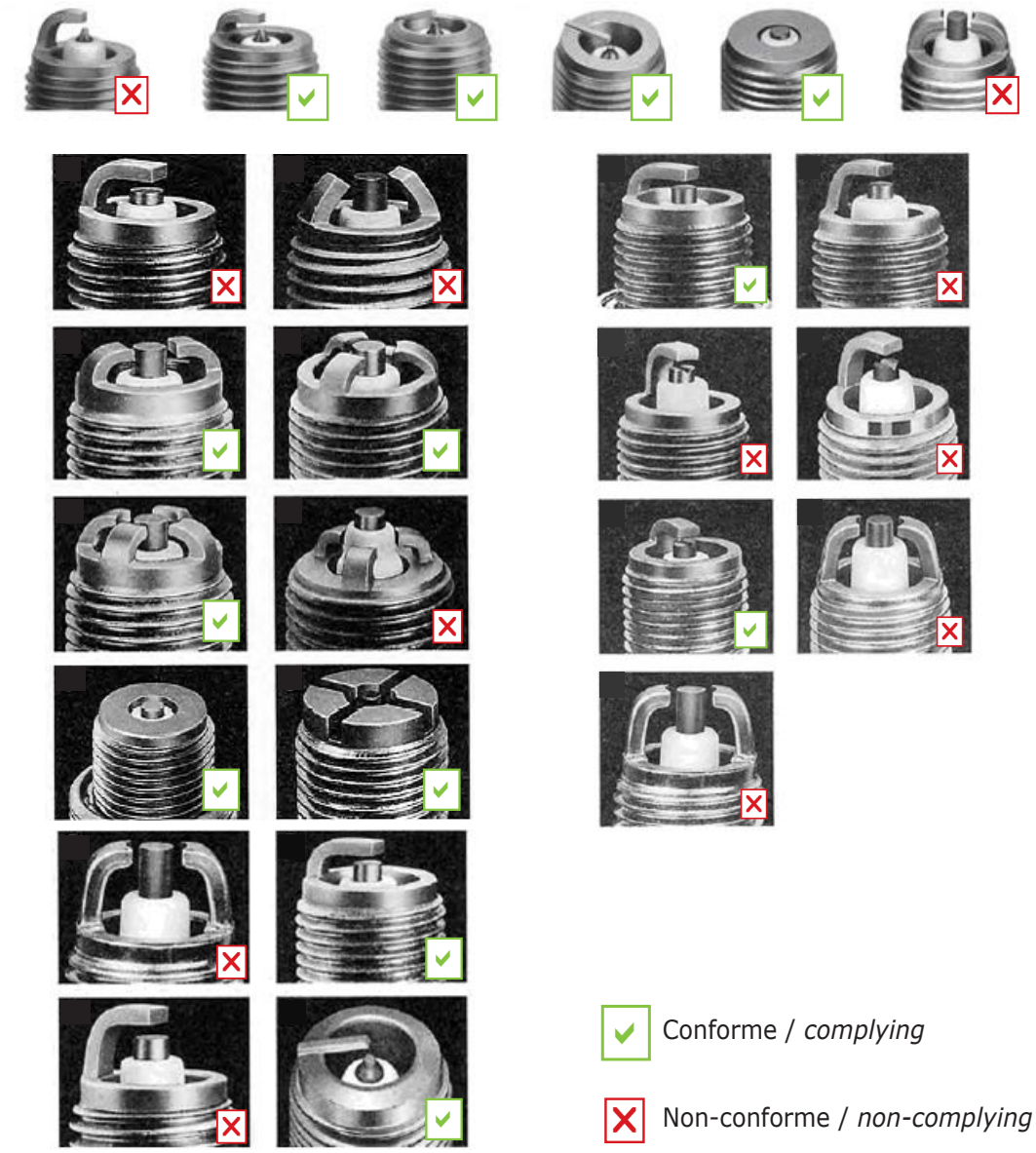

Conforme / *complying*

Non-conforme / *non-complying*

APPENDIX 2 - Wheels

DESSIN TECHNIQUE N°4

Jante 5''

TECHNICAL DRAWING No. 4

5'' Rim

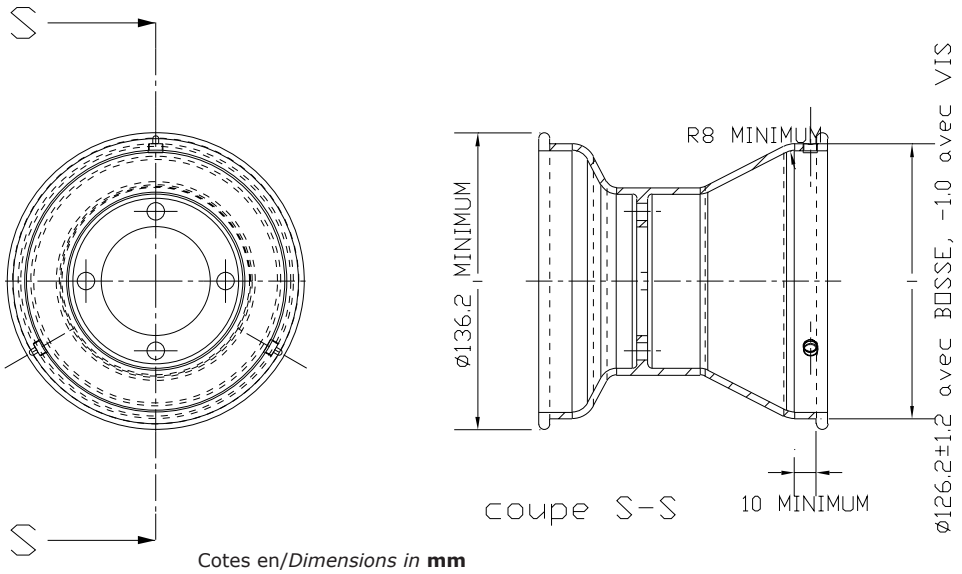

Cotes en/*Dimensions in* **mm**